ZONACENTRO

TYPE SR

USING AREA

- On steam line
- On temperature regulation applications with hot or cold water, oil
- Injection moulding industries
- In other industries in general

MATERIAL COUPLING

Plug	Brass Nickel Plated
Sleeve	Brass Nickel Plated
Springs	Stainless Steel
Locking O-rings	Stainless Steel
Balls	Stainless Steel
Seals	NBR Nitrile
Socket Body	Brass Nickel Plated

WORKING PRESSURE

15 BAR (145 PSI)

TEMPERATURE RANGE

- 20º C + 100º C

For the option with seals VITON, add V at the end of reference (ex: RP8M10V)

TYPE SR — FULL FLOW — FLEXIBLE HOSE PLUG

PLUG

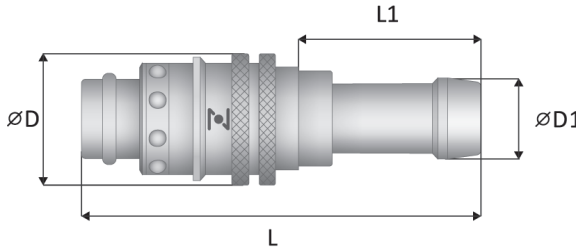

REFERENCE	ØD	ØD1		L	L1
RP8M10	20	10	3/8	66	28
RP8M13	20	13	1/2	66	28
RP12M13	28	13	1/2	78	33
RP12M16	28	16	5/8	78	33

BLUE RING -B Final reference
RED RING -R Final reference

NEED CLAMP

TYPE SR — FULL FLOW — FLEXIBLE HOSE PLUG 45º

PLUG 45º

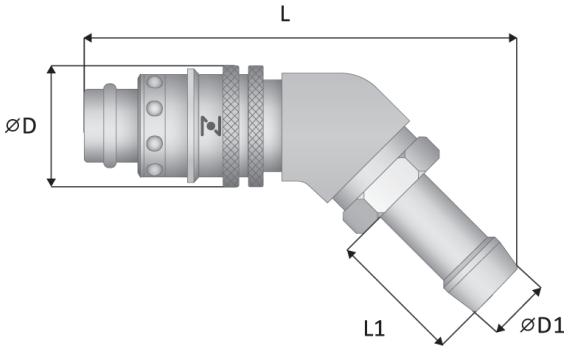

REFERENCE	ØD	ØD1		L	L1
RP8M1045	20	10	3/8	72	27
RP8M1345	20	13	1/2	73	28
RP12M1345	28	13	1/2	83	28
RP12M1645	28	16	5/8	88	33

BLUE RING -B Final reference
RED RING -R Final reference

NEED CLAMP

TYPE SR — FULL FLOW — FLEXIBLE HOSE PLUG 90º

PLUG 90º

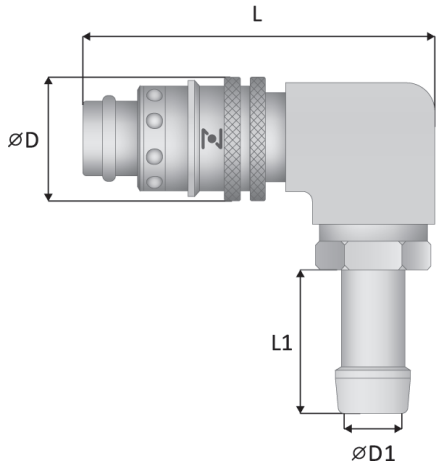

REFERENCE	ØD	ØD1		L	L1
RP8M1090	20	10	3/8	55	27
RP8M1390	20	13	1/2	55	28
RP12M1390	28	13	1/2	85	28
RP12M1690	28	16	5/8	85	33

BLUE RING -B Final reference
RED RING -R Final reference

NEED CLAMP

TYPE SR — FULL FLOW — PUSH-LOCK HOSE PLUG

PLUG

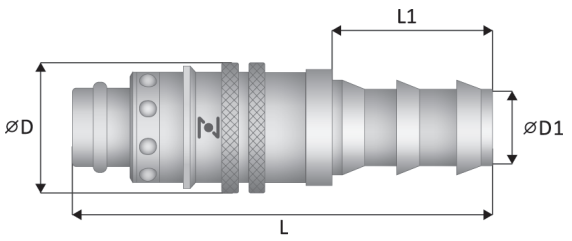

REFERENCE	ØD	ØD1		L	L1
RP8ML10	20	10	3/8	62	25
RP8ML13	20	13	1/2	69	29
RP12ML13	28	13	1/2	74	29
RP12ML16	28	16	5/8	81	36

BLUE RING -B Final reference
RED RING -R Final reference

NO CLAMP NEEDED

TYPE SR — FULL FLOW — PUSH-LOCK HOSE PLUG 45º

PLUG 45º

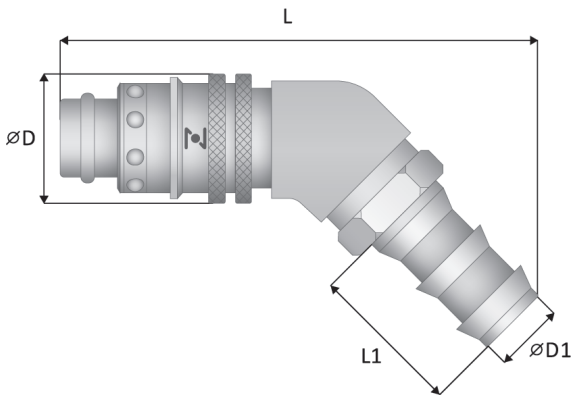

REFERENCE	ØD	ØD1		L	L1
RP8ML1045	20	10	3/8	70	25
RP8ML1345	20	13	1/2	74	29
RP12ML1345	28	13	1/2	84	29
RP12ML1645	28	16	5/8	91	36

BLUE RING -B Final reference
RED RING -R Final reference

NO CLAMP NEEDED

TYPE SR — FULL FLOW — PUSH-LOCK HOSE PLUG 90º

PLUG 90º

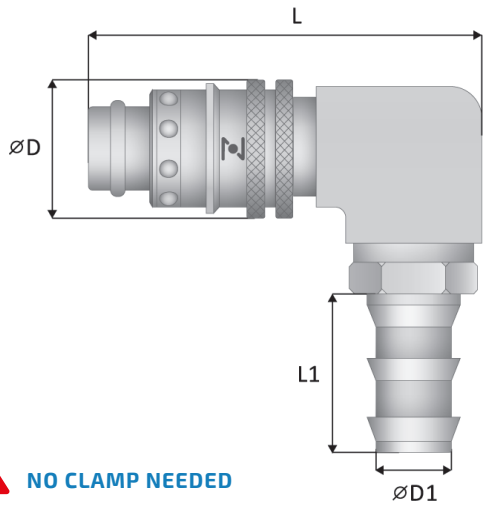

REFERENCE	ØD	ØD1		L	L1
RP8ML1090	20	10	3/8	55	25
RP8ML1390	20	13	1/2	55	29
RP12ML1390	28	13	1/2	85	29
RP12M1690	28	16	5/8	85	36

BLUE RING -B Final reference
RED RING -R Final reference

NO CLAMP NEEDED

TYPE SR — FULL FLOW — FEMALE THREAD PLUG

PLUG

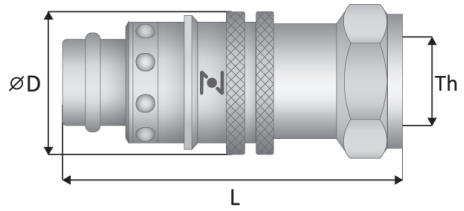

REFERENCE	TH	ØD	L
RP8F14	BSP 1/4	20	48
RP8F38	BSP 3/8	20	48
RP12F12	BSP 1/2	28	61

BLUE RING -B Final reference
RED RING -R Final reference

TYPE SR — FULL FLOW — FEMALE THREAD PLUG 45º

PLUG 45º

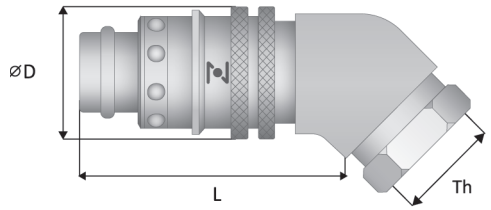

REFERENCE	TH	ØD	L
RP8F1445	BSP 1/4	20	46
RP8F3845	BSP 3/8	20	46
RP12F1245	BSP 1/2	28	54

BLUE RING -B Final reference
RED RING -R Final reference

TYPE SR — FULL FLOW — FEMALE THREAD PLUG 90º

PLUG 90º

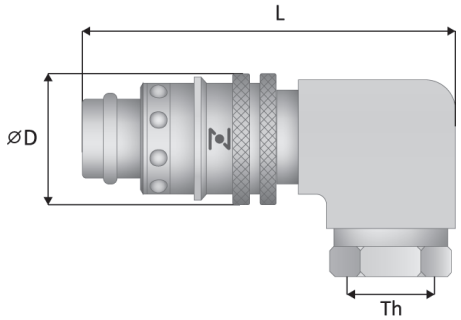

REFERENCE	TH	ØD	L
RP8F1490	BSP 1/4	20	55
P8F3890	BSP 3/8	20	55
RP12F1290	BSP 1/2	28	85

BLUE RING -B Final reference
RED RING -R Final reference

TYPE SR — FULL FLOW — MALE THREAD SOCKET

SOCKET

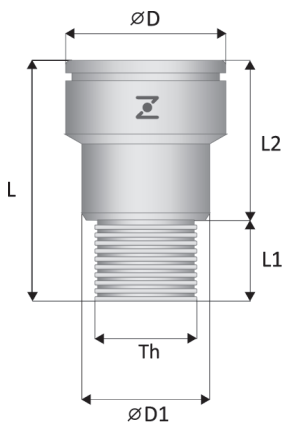

REFERENCE	TH	ØD	ØD1	L	L1	L2
RSM818	BSP 1/8	21	17,5	33	10	21
RSM814	BSP 1/4	21	17,5	33	12	21
RSM838	BSP 3/8	21	-	24	14	10
RSM810x1	BSP M10x1	21	17,5	33	12	21
RSM810x15	BSP M10x1,5	21	17,5	33	12	21
RSM814x15	BSP M14x1,5	21	17,5	33	12	21
RSM1238	BSP 3/8	32	25	41	13	28
RSM1212	BSP 1/2	32	25	41	13	28
RSM1234	BSP 3/4	32	-	32	16	13

BLUE RING -B Final reference
RED RING -R Final reference

TYPE SR — FULL FLOW — FEMALE THREAD SOCKET

SOCKET

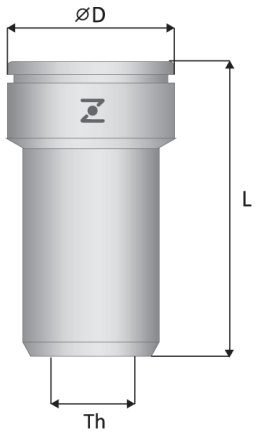

REFERENCE	TH	ØD	L
RSF818	BSP 1/8	21	39
RSF814	BSP 1/4	21	39
RSF1238	BSP 3/8	32	50
RSF1212	BSP 1/2	32	50

BLUE RING -B Final reference
RED RING -R Final reference

TYPE SR — FULL FLOW — EXTENSION SOCKET WITH THREAD

SOCKET

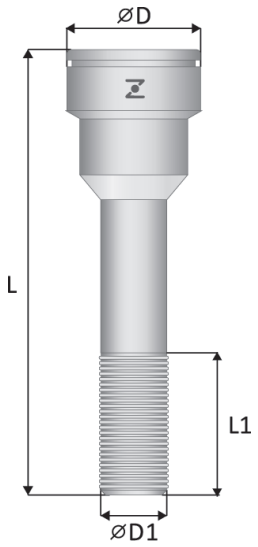

REFERENCE	TH	ØD	L	L1
R50EM818	BSP 1/8	21	50	26
R100EM818	BSP 1/8	21	100	60
R150EM818	BSP 1/8	21	150	60
R200EM818	BSP 1/8	21	200	60
R50EM814	BSP 1/4	21	50	26
R100EM814	BSP 1/4	21	100	60
R150EM814	BSP 1/4	21	150	60
R200EM814	BSP 1/4	21	200	60

BLUE RING -B Final reference
RED RING -R Final reference

TYPE SR — FULL FLOW — EXTENSION SOCKET WITHOUT THREAD

SOCKET

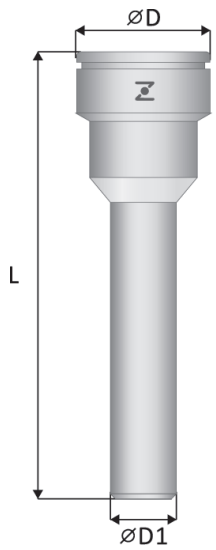

REFERENCE	TH	ØD	ØD1	L
R100ES818	BSP 1/8	21	10,2	100
R150ES818	BSP 1/8	21	10,2	150
R200ES818	BSP 1/8	21	10,2	200
R100ES814	BSP 1/4	21	13,5	100
R150ES814	BSP 1/4	21	13,5	150
R200ES814	BSP 1/4	21	13,5	200
R150ES1238	BSP 3/8	32	17,2	150
R200ES1238	BSP 3/8	32	17,2	200
R250ES1238	BSP 3/8	32	17,2	250
R150ES1212	BSP 1/2	32	21,3	150
R200ES1212	BSP 1/2	32	21,3	200
R250ES1212	BSP 1/2	32	21,3	250

BLUE RING -B Final reference
RED RING -R Final reference

ZONACENTRO

TYPE SD

USING AREA

- On steam line
- On temperature regulation applications with hot or cold water, oil
- Injection moulding industries
- In other industries in general

MATERIAL COUPLING

Body	Brass
Sleeve	Brass / Nickel
Valve	Brass
Seals	FPM (viton)
Balls	Stainless Steel
Locking Rings	Stainless Steel
Springs	Stainless Steel
Plug	Brass

WORKING PRESSURE

15 BAR (145 PSI)

TEMPERATURE RANGE

- 15^0 C + 180^0 C

TYPE SD — FLEXIBLE HOSE SOCKET

SOCKET

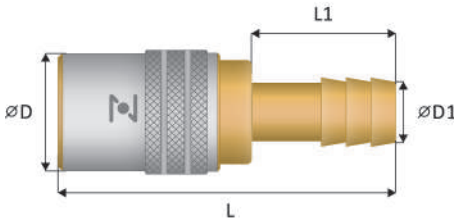

FULL FLOW	SHUT-OFF VALVE	DIMENSIONS			
		ØD	ØD1	L	L1
D6M6	D6M6V	17	6	51	22
D6M10	D6M10V	17	10	53	22
D9M10	D9M10V	23	10	63	25
D9M13	D9M13V	23	13	63	25
D16M16	D16M16V	32	16	94	36
D16M19	D16M19V	32	19	94	36

NEED CLAMP

TYPE SD — FLEXIBLE HOSE SOCKET 45º

SOCKET 45º

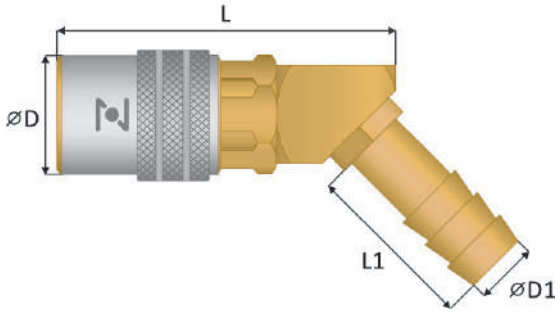

FULL FLOW	SHUT-OFF VALVE	DIMENSIONS			
		ØD	ØD1	L	L1
D6M645	D6M645V	17	6	40	25
D6M1045	D6M1045V	17	10	40	25
D9M1045	D9M1045V	23	10	62	25
D9M1345	D9M1345V	23	13	62	25
D16M1645	D16M1645V	32	16	83	32
D16M1945	D16M1945V	32	19	83	32

NEED CLAMP

TYPE SD — FLEXIBLE HOSE SOCKET 90º

SOCKET 90º

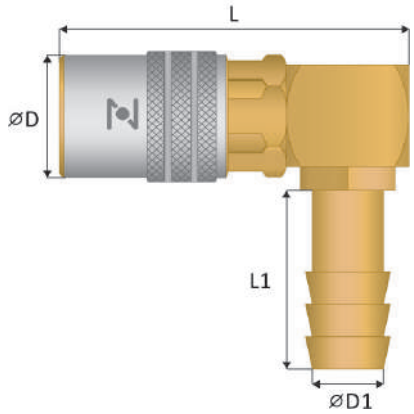

FULL FLOW	SHUT-OFF VALVE	DIMENSIONS			
		ØD	ØD1	L	L1
D6M690	D6M690V	17	6	40	25
D6M1090	D6M1090V	17	10	40	25
D9M1090	D9M1090V	23	10	62	25
D9M1390	D9M1390V	23	13	62	25
D16M1690	D16M1690V	32	16	83	32
D16M1990	D16M1990V	32	19	83	32

NEED CLAMP

TYPE SD — PUSH-LOCK HOSE SOCKET

SOCKET

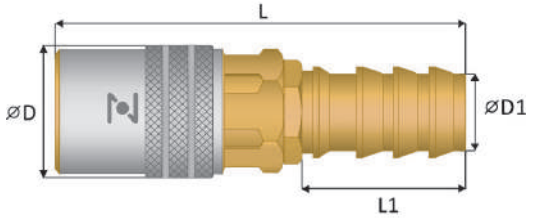

FULL FLOW	SHUT-OFF VALVE	DIMENSIONS			
		ØD	ØD1	L	L1
D6ML6	D6ML6V	17	6	49	20
D6ML10	D6ML10V	17	10	47	24
D9ML10	D9ML10V	23	10	63	25
D9ML13	D9ML13V	23	13	67	29
D16ML16	D16ML16V	32	16	94	36
D16ML19	D16ML19V	32	19	94	36

NO CLAMP NEEDED

TYPE SD — PUSH-LOCK HOSE SOCKET 45º

SOCKET 45º

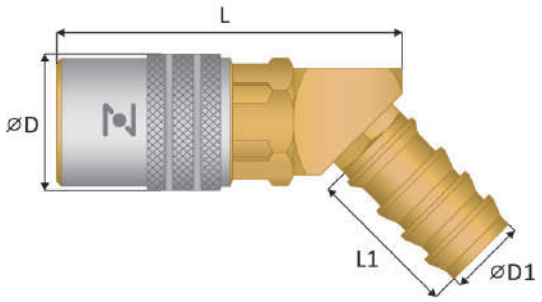

FULL FLOW	SHUT-OFF VALVE	DIMENSIONS			
		ØD	ØD1	L	L1
D6ML645	D6ML645V	17	6	40	20
D6ML1045	D6ML1045V	17	10	45	24
D9ML1045	D9ML1045V	23	10	62	25
D9ML1345	D9ML1345V	23	13	62	29
D16ML1645	D16ML1645V	32	16	83	38
D16ML1945	D16ML1945V	32	19	83	38

NO CLAMP NEEDED

TYPE SD — PUSH-LOCK HOSE SOCKET 90º

SOCKET 90º

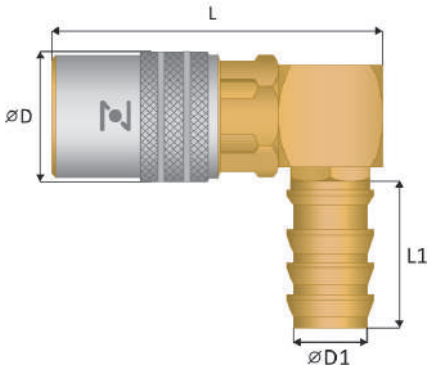

FULL FLOW	SHUT-OFF VALVE	DIMENSIONS			
		ØD	ØD1	L	L1
D6ML690	D6ML690V	17	6	45	20
D6ML1090	D6ML1090V	17	10	45	24
D9ML1090	D9ML1090V	23	10	62	25
D9ML1390	D9ML1390V	23	13	62	29
D16ML1690	D16ML1690V	32	16	83	38
D16ML1990	D16ML1990V	32	19	83	38

NO CLAMP NEEDED

TYPE SD — FEMALE THREAD SOCKET

SOCKET

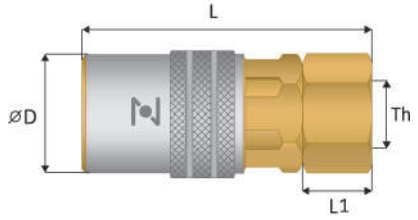

FULL FLOW	SHUT-OFF VALVE	DIMENSIONS			
		TH	ØD	L	L1
D6PRF14	D6PRF14V	BSP 1/4	17	40	12
D9PRF14	D9PRF14V	BSP 1/4	23	54	12
D9PRF38	D9PRF38V	BSP 3/8	23	54	12
D16PRF12	D16PRF12V	BSP 1/2	32	75	15

TYPE SD — FEMALE THREAD SOCKET 45º

SOCKET 45º

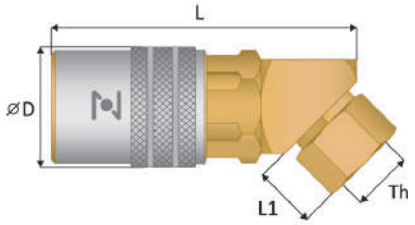

FULL FLOW	SHUT-OFF VALVE	DIMENSIONS			
		TH	ØD	L	L1
D9PRF1445	D9PRF1445V	BSP 1/4	23	62	12
D9PRF3845	D9PRF3845V	BSP 3/8	23	62	12

TYPE SD — FEMALE THREAD SOCKET 90º

SOCKET 90º

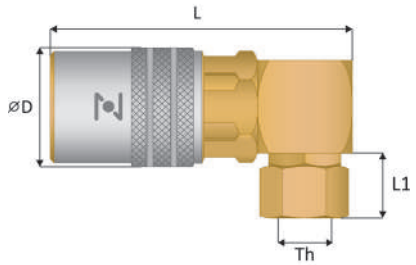

FULL FLOW	SHUT-OFF VALVE	DIMENSIONS			
		TH	ØD	L	L1
D9PRF1490	D9PRF1490V	BSP 1/4	23	62	12
D9PRF3890	D9PRF3890V	BSP 3/8	23	62	12

TYPE SD — MALE THREAD SOCKET

SOCKET

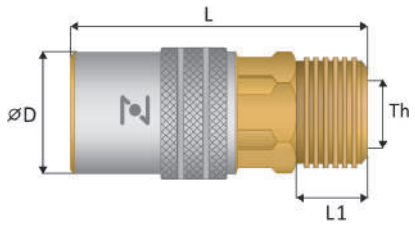

FULL FLOW	SHUT-OFF VALVE	DIMENSIONS			
		TH	⌀D	L	L1
D6PRM18	D6PRM18V	BSP 1/8	17	44	12
D6PRM14	D6PRM14V	BSP 1/4	17	47	15
D9PRM14	D9PRM14V	BSP 1/4	23	56	11
D9PRM38	D9PRM38V	BSP 3/8	23	56	11
D16PRM12	D16PRM12V	BSP 1/2	32	80	14
D16PRM34	D16PRM34V	BSP 3/4	32	82	16

TYPE SD — MALE THREAD SOCKET 45º

SOCKET 45º

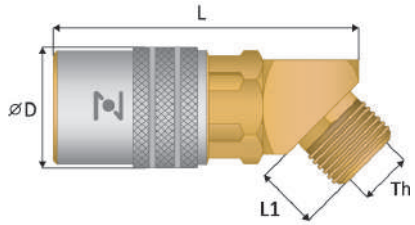

FULL FLOW	SHUT-OFF VALVE	DIMENSIONS			
		TH	⌀D	L	L1
D6PRM1845	D6PRM1845V	BSP 1/8	17	40	10
D6PRM1445	D6PRM1445V	BSP 1/4	17	40	10
D9PRM1445	D9PRM1445V	BSP 1/4	23	62	11
D9PRM3845	D9PRM3845V	BSP 3/8	23	62	11
D16PRM1245	D16PRM1245V	BSP 1/2	32	83	12

TYPE SD — MALE THREAD SOCKET 90º

SOCKET 90º

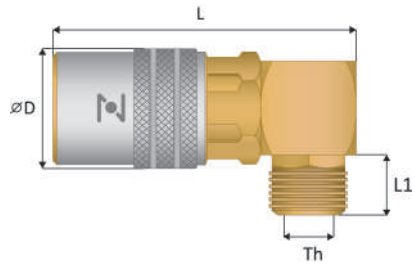

FULL FLOW	SHUT-OFF VALVE	DIMENSIONS			
		TH	⌀D	L	L1
D6PRM1890	D6PRM1890V	BSP 1/8	17	40	10
D6PRM1490	D6PRM1490V	BSP 1/4	17	40	10
D9PRM1490	D9PRM1490V	BSP 1/4	23	62	11
D9PRM3890	D9PRM3890V	BSP 3/8	23	62	11
D16PRM1290	D16PRM1290V	BSP 1/2	32	83	12

TYPE SD — MALE THREAD PLUG

PLUG

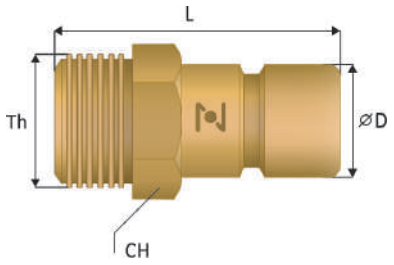

FULL FLOW	DIMENSIONS			
	TH	ØD	CH	L
D6PM18	BSP 1/8	9	13	23
D6PM14	BSP 1/4	9	13	24
D6PM38	BSP 3/8	9	17	29
D9PM14	BSP 1/4	13	14	33
D9PM38	BSP 3/8	13	17	33
D9PM12	BSP 1/2	13	22	37
D16PM12	BSP 1/2	20	22	42
D16PM34	BSP 3/4	20	27	44

TYPE SD — MALE THREAD PLUG WITH VALVE

PLUG

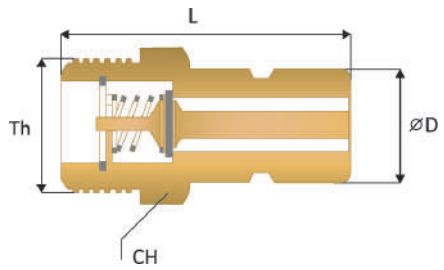

SHUT-OFF VALVE	DIMENSIONS			
	TH	ØD	CH	L
D6PM14V	BSP 1/4	9	16	27
D6PM38V	BSP 3/8	9	17	27
D9PM14V	BSP 1/4	13	16	33
D9PM38V	BSP 3/8	13	19	33
D9PM12V	BSP 1/2	13	22	37
D16PM12V	BSP 1/2	20	22	50
D16PM34V	BSP 3/4	20	27	54

TYPE SD — FEMALE THREAD PLUG

PLUG

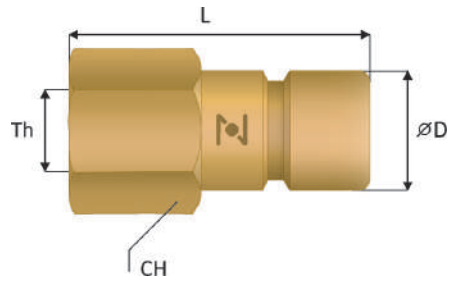

FULL FLOW	DIMENSIONS			
	TH	ØD	CH	L
D6PF18	BSP 1/8	9	13	20
D6PF14	BSP 1/4	9	16	24
D6PF38	BSP 3/8	9	19	24
D9PF14	BSP 1/4	13	14	29
D9PF38	BSP 3/8	13	19	29
D9PF12	BSP 1/2	13	24	33
D16PF38	BSP 3/8	20	21	32
D16PF12	BSP 1/2	20	24	35

TYPE SD — FLEXIBLE HOSE PLUG

PLUG

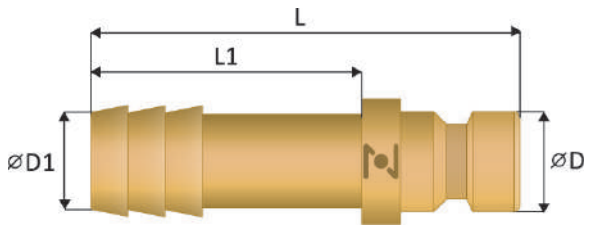

REFERENCE	DIMENSIONS			
	ØD	ØD1	L	L1
D6FM6	9	6	39	22
D6FM10	9	10	39	22
D9FM10	13	10	41	25
D9FM13	13	13	43	25
D16FM16	20	16	50	27
D16FM19	20	19	50	27

NEED CLAMP

TYPE SD — PUSH-LOCK HOSE PLUG

PLUG

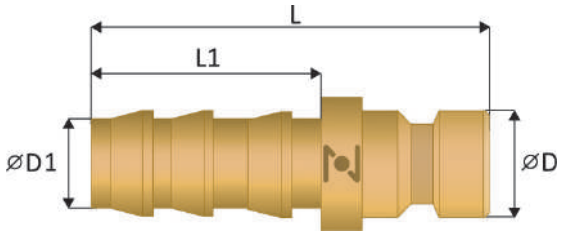

REFERENCE	DIMENSIONS			
	ØD	ØD1	L	L1
D6FMPL10	9	10	38	22
D9FMPL10	13	10	43	25
D9FMPL13	13	13	47	29
D16FMPL13	20	13	51	28
D16FMPL19	20	19	51	28

NO CLAMP NEEDED

TYPE SD — EXTENDER PLUG WITHOUT THREAD

PLUG

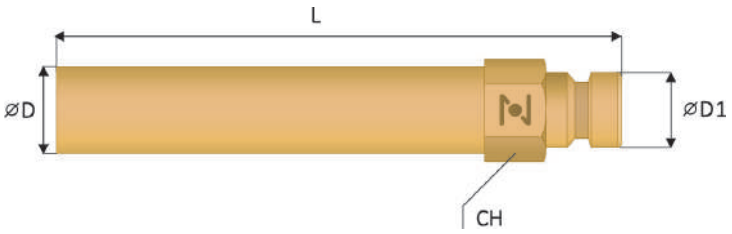

REFERENCE	DIMENSIONS			
	ØD	ØD1	CH	L
D663ES	10	9	11	63
D6100ES	10	9	11	100
D6120ES	10	9	11	120
D6240ES	10	9	11	240
D9150ES	14	13	15	150
D9200ES	14	13	15	200
D9300ES	14	13	15	300
D16500ES	21	20	22	500
D16800ES	21	20	22	800

TYPE SD — EXTENSION PLUG WITH THREAD

PLUG

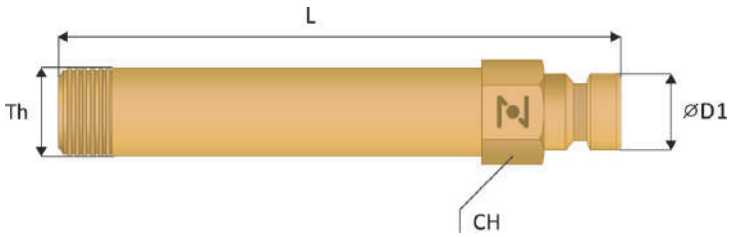

REFERENCE	DIMENSIONS			
	TH	ØD1	CH	L
D6R100ES	BSP 1/8	9	11	100
D6R150ES	BSP 1/8	9	11	150
D6R250ES	BSP 1/8	9	11	250
D9R50ES	BSP 1/4	13	15	50
D9R100ES	BSP 1/4	13	15	100
D9R150ES	BSP 1/4	13	15	150
D9R200ES	BSP 1/4	13	15	200
D9R250ES	BSP 1/4	13	15	250

TYPE SD — EXTENSION PLUG WITH THREAD

PLUG

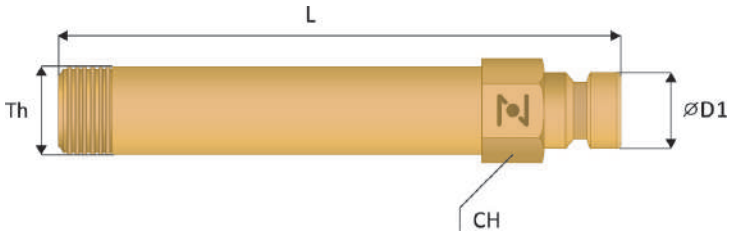

REFERENCE	DIMENSIONS			
	TH	ØD1	CH	L
D9R50ES	BSP 3/8	13	17	50
D9R100ES	BSP 3/8	13	17	100
D9R150ES	BSP 3/8	13	17	150
D9R200ES	BSP 3/8	13	17	200
D9R250ES	BSP 3/8	13	17	250

TYPE SD — EXTENSION PLUG WITH THREAD

PLUG

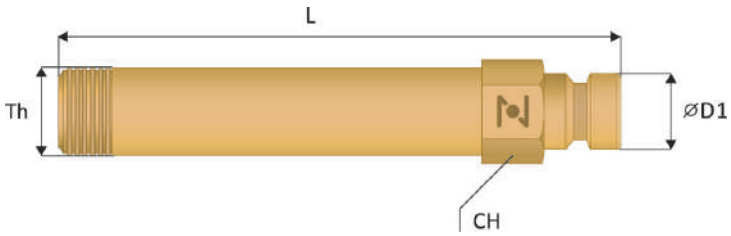

REFERENCE	DIMENSIONS			
	TH	ØD1	CH	L
D16R12ES500	BSP 1/2	21	22	500
D16R12ES800	BSP 1/2	21	22	800

ZONACENTRO

TYPE SH

USING AREA

- On steam line
- On temperature regulation applications with hot or cold water, oil
- Injection moulding industries
- In other industries in general

MATERIAL COUPLING

Body	Brass
Sleeve	Brass / Nickel
Valve	Brass
Seals	FPM (viton)
Balls	Stainless Steel
Locking Rings	Stainless Steel
Springs	Stainless Steel
Plug	Brass

WORKING PRESSURE

15 BAR (145 PSI)

TEMPERATURE RANGE

- 15^0 C + 180^0 C

TYPE SH — FLEXIBLE HOSE SOCKET

SOCKET

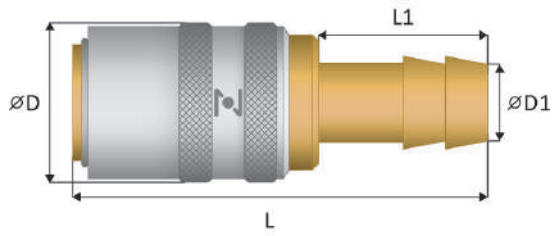

FULL FLOW	SHUT-OFF VALVE	DIMENSIONS			
		ØD	ØD1	L	L1
HP6M6	HP6M6V	18	6	47	17
HP6M10	HP6M10V	18	10	57	18
HP9M10	HP9M10V	23	10	59	23
HP9M13	HP9M13V	23	13	59	23
HP13M16	HP13M16V	31	16	90	32
HP13M19	HP13M19V	31	19	90	32

NEED CLAMP

TYPE SH — FLEXIBLE HOSE SOCKET 45º

SOCKET 45º

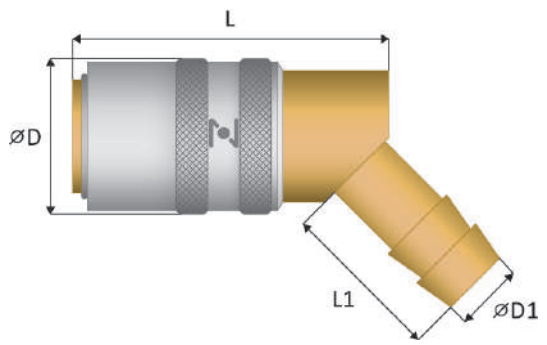

FULL FLOW	SHUT-OFF VALVE	DIMENSIONS			
		ØD	ØD1	L	L1
HP6M1045	HP6M1045V	18	10	42	19
HP9M1045	HP9M1045V	23	10	54	23
HP9M1345	HP9M1345V	23	13	54	23
HP13M1645	HP13M1645	31	16	78	32
HP13M1945	HP13M1945	31	19	78	32

NEED CLAMP

TYPE SH — FLEXIBLE HOSE SOCKET 90º

SOCKET 90º

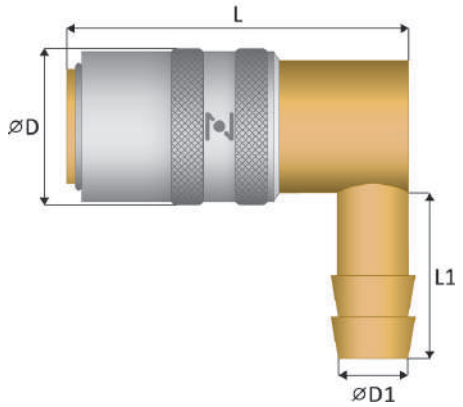

FULL FLOW	SHUT-OFF VALVE	DIMENSIONS			
		ØD	ØD1	L	L1
HP6M690	HP6M690V	18	6	46	17
HP6M1090	HP6M1090V	18	10	46	20
HP9M1090	HP9M1090V	23	10	54	23
HP9M1390	HP9M1390V	23	13	54	23
HP16M1690	HP16M1690V	31	16	78	32
HP16M1990	HP16M1990V	31	19	78	32

NEED CLAMP

TYPE SH — PUSH-LOCK HOSE SOCKET

SOCKET

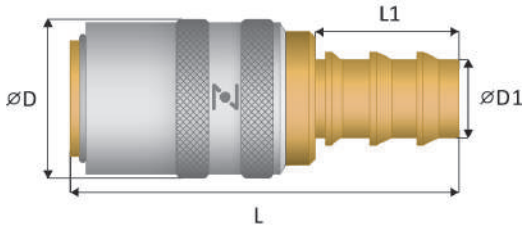

FULL FLOW	SHUT-OFF VALVE	DIMENSIONS			
		ØD	ØD1	L	L1
HP6ML6	HP6ML6V	18	6	59	20
HP6ML10	HP6ML10V	18	10	48	18
HP9ML10	HP9ML10V	23	10	65	25
HP9ML13	HP9ML13V	23	13	65	29
HP13ML16	HP13ML16V	31	16	84	38
HP13ML19	HP13ML19V	31	19	84	38

NO CLAMP NEEDED

TYPE SH — PUSH-LOCK HOSE SOCKET 45º

SOCKET 45º

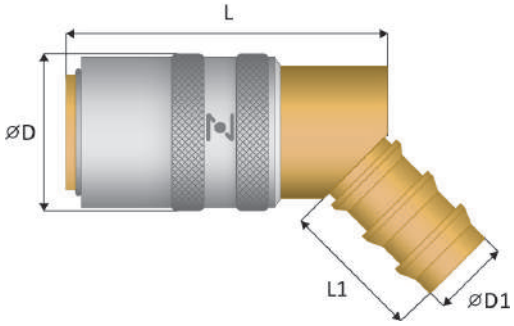

FULL FLOW	SHUT-OFF VALVE	DIMENSIONS			
		ØD	ØD1	L	L1
HP6ML645	HP6ML645V	18	6	42	18
HP6ML1045	HP6ML1045V	18	10	42	18
HP9ML1045	HP9ML1045V	23	10	54	25
HP9ML1345	HP9ML1345V	23	13	54	29
HP13ML1645	HP13ML1645V	31	16	84	38
HP13ML1945	HP13ML1945V	31	19	84	38

NO CLAMP NEEDED

TYPE SH — PUSH-LOCK HOSE SOCKET 90º

SOCKET 90º

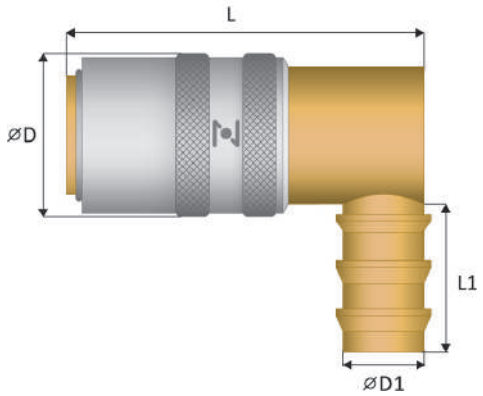

FULL FLOW	SHUT-OFF VALVE	DIMENSIONS			
		ØD	ØD1	L	L1
HP6ML690	HP6ML690V	18	6	42	18
HP6ML1090	HP6ML1090V	18	10	42	18
HP9ML1090	HP9ML1090V	23	10	54	25
HP9ML1390	HP9ML1390V	23	13	54	29
HP13ML1690	HP13ML1690V	31	16	84	38
HP13ML1990	HP13ML1990V	31	19	84	38

NO CLAMP NEEDED

TYPE SH — MALE THREAD PLUG

PLUG

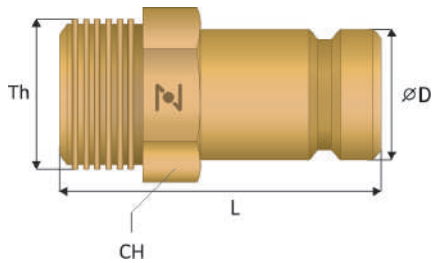

FULL FLOW	DIMENSIONS			
	TH	ØD	CH	L
H6PM18	BSP 1/8	9	11	24
H6PM16	BSP 1/4	9	15	26
H6PM38	BSP 3/8	9	17	30
H9PM14	BSP 1/4	13	15	26
H9PM38	BSP 3/8	13	17	26
H9PM12	BSP 1/2	13	22	47
H13PM12	BSP 1/2	19	22	51
H13PM34	BSP 3/4	19	27	51

TYPE SH — MALE THREAD PLUG WITH VALVE

PLUG

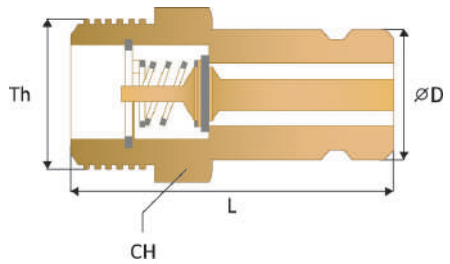

SHUT-OFF VALVE	DIMENSIONS			
	TH	ØD	CH	L
H6PM14V	BSP 1/4	9	15	29
H6PM38V	BSP 3/8	9	17	29
H9PM14V	BSP 1/4	13	15	26
H9PM38V	BSP 3/8	13	17	26
H9PM12V	BSP 1/2	13	22	47
HP13PM12V	BSP 1/2	19	22	51
HP13PM34V	BSP 3/4	19	27	51

TYPE SH — FEMALE THREAD PLUG

PLUG

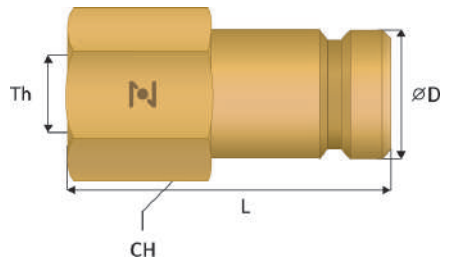

REFERENCE	DIMENSIONS			
	TH	ØD	CH	L
H6PF18	BSP 1/8	9	13	24
H6PF14	BSP 1/4	9	16	27
H6PF38	BSP 3/8	9	19	26
H9PF14	BSP 1/4	13	17	26
H9PF38	BSP 3/8	13	19	26
H9PF12	BSP 1/2	13	24	47

TYPE SH — FLEXIBLE HOSE PLUG

PLUG

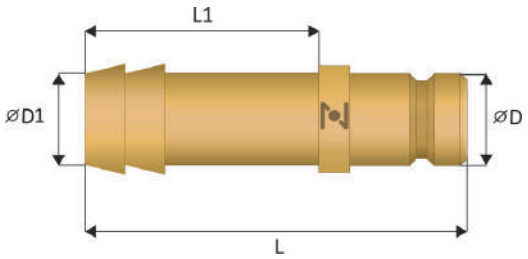

REFERENCE	DIMENSIONS			
	Ø D	Ø D1	L	L1
H6M10	9	10	39	22
H9M10	13	10	41	23
H9M13	13	13	43	23
H13M16	19	16	53	38
H13M19	19	19	57	38

NEED CLAMP

TYPE SH — PUSH-LOCK HOSE PLUG

PLUG

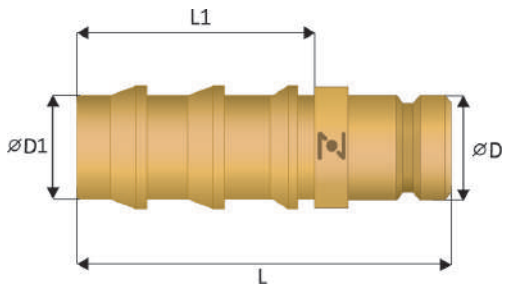

REFERENCE	DIMENSIONS			
	Ø D	Ø D1	L	L1
H6ML10	9	10	41	24
H9ML10	10	10	43	25
H9ML13	13	13	47	29
H13ML16	19	16	68	38
H13ML19	19	19	68	38

NO CLAMP NEEDED

TYPE SH — EXTENSION PLUG WITHOUT THREAD

PLUG

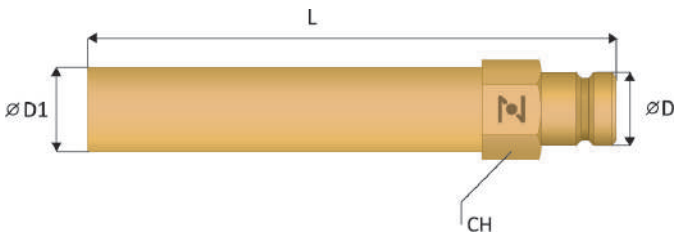

REFERENCE	DIMENSIONS			
	Ø D	Ø D1	CH	L
H663ES	9	8	9	63
H6100ES	9	8	9	100
H6120ES	9	11	11	120
H6240ES	9	11	11	240
H6360ES	9	11	11	360
H9150ES	13	14	15	150
H9300ES	13	14	15	300
H9450ES	13	14	15	450

ZONACENTRO

TYPE SY

USING AREA

- On steam line
- On temperature regulation applications with hot or cold water, oil
- Injection moulding industries
- In other industries in general

MATERIAL COUPLING

Body	Brass
Sleeve	Brass
Valve	Brass
Seals	NBR/FPM
Balls	Stainless Steel
Springs	Stainless Steel
Plug	Brass

WORKING PRESSURE

15 BAR (145 PSI)

TEMPERATURE RANGE

- 15^0 C + 180^0 C

TYPE SY — FLEXIBLE HOSE SOCKET

SOCKET

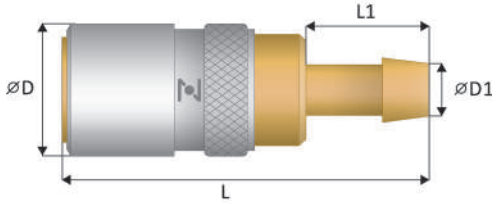

FULL FLOW	SHUT-OFF VALVE	TYPE	DIMENSIONS			
			ØD	ØD1	L	L1
YSF6M8	YSF6M8V	6	19	8	60	23
YSF9M10	YSF9M10V	9	25	10	69	28
YSF9M13	YSF9M13V	9	25	13	69	28
YSF12M13	YSF12M13V	12	31	13	82	28
YSF12M16	YSF12M16V	12	31	16	82	28
YSF16M16	YSF16M16V	16	38	16	109	28
YSF16M19	YSF16M19V	16	38	19	114	33

NEED CLAMP

TYPE SY — FLEXIBLE HOSE SOCKET 90º

SOCKET 90º

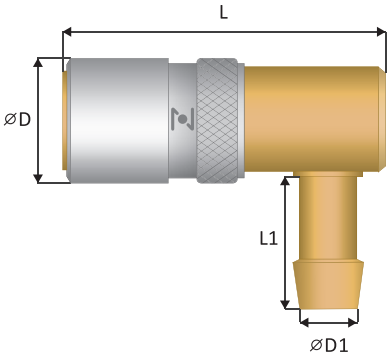

FULL FLOW	SHUT-OFF VALVE	TYPE	DIMENSIONS			
			ØD	ØD1	L	L1
YSF6M890	YSF6M890V	6	19	8	59	23
YSF9M1090	YSF9M1090V	9	25	10	65	26
YSF9M1390	YSF9M1390V	9	25	13	65	26
YSF12M1690	YSF12M1690V	12	31	16	82	28
YSF16M1990	YSF16M1990V	16	38	19	132	60

NEED CLAMP

TYPE SY — FEMALE THREAD SOCKET 90º

SOCKET 90º

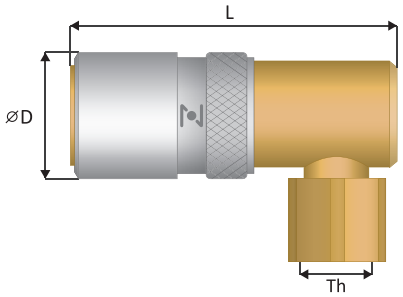

FULL FLOW	SHUT-OFF VALVE	TYPE	DIMENSIONS		
			TH	ØD1	L
YSF6F1490	YSF6F1490V	6	BSP 1/4	19	59
YSF9F3890	YSF9F3890V	9	BSP 3/8	35	65
YSF12F1290	YSF12F1290V	12	BSP 1/2	31	81

TYPE SY — PUSH-LOCK HOSE SOCKET

SOCKET

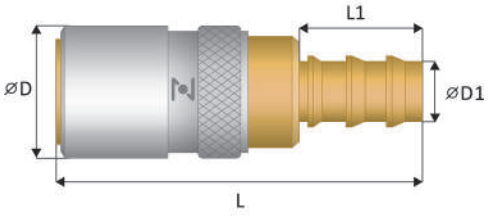

FULL FLOW	SHUT-OFF VALVE	TYPE	DIMENSIONS			
			ØD	ØD1	L	L1
YSF6ML10	YSF6ML10V	6	19	10	60	23
YSF9ML10	YSF9ML10V	9	25	10	69	25
YSF9ML13	YSF9ML13V	9	25	13	69	29
YSF12ML13	YSF12ML13V	12	31	13	82	28
YSF16ML16	YSF16ML16V	16	38	16	109	28
YSF16ML19	YSF16ML19V	16	38	19	114	33

NO CLAMP NEEDED

TYPE SY — PUSH-LOCK HOSE SOCKET 90º

SOCKET 90º

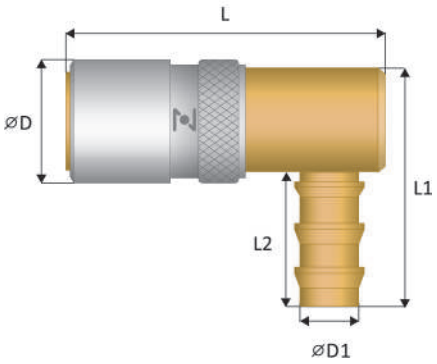

FULL FLOW	SHUT-OFF VALVE	TYPE	DIMENSIONS				
			ØD	ØD1	L	L1	L2
YSF9ML1090	YSF9ML1090V	9	25	10	65	52	25
YSF9ML1390	YSF9ML1390V	9	25	13	65	52	29

NO CLAMP NEEDED

TYPE SY — MALE THREAD SOCKET

SOCKET

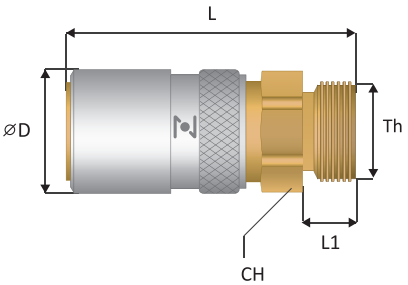

FULL FLOW	SHUT-OFF VALVE	TYPE	DIMENSIONS				
			TH	CH	Ø D	L	L1
YSF6M14	YSF6M14V	6	BSP 1/4	17	19	55	10
YSF9M38	YSF9M38V	9	BSP 3/8	22	25	53	12
YSF12M12	YSF12M12V	12	BSP 1/2	27	31	67	14
YSF16M34	YSF16M34V	16	BSP 3/4	32	38	115	14

TYPE SY — FEMALE THREAD SOCKET

SOCKET

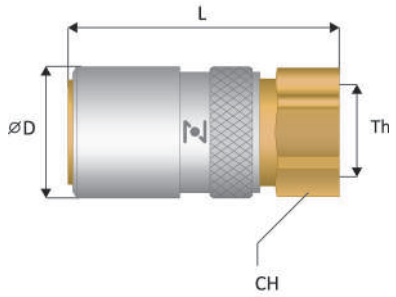

FULL FLOW	SHUT-OFF VALVE	TYPE	DIMENSIONS			
			TH	CH	Ø D	L
YSF6F14	YSF6F14V	6	BSP 1/4	17	19	46
YSF9F38	YSF9F38V	9	BSP 3/8	22	25	53
YSF12F12	YSF12F12V	12	BSP 1/2	27	31	67
YSF16F34	YSF16F34V	16	BSP 3/4	35	38	90

TYPE SY — MALE THREAD PLUG WITH VALVE

PLUG

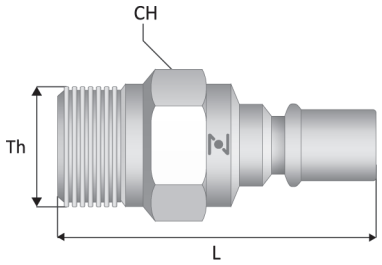

SHUT-OFF VALVE	TYPE	DIMENSIONS		
		TH	CH	L
YSM6M18V	6	BSP 1/8	17	45
YSM6M14V	6	BSP 1/4	17	45
YSM9M14V	9	BSP 1/4	19	51
YSM9M38V	9	BSP 3/8	20	48
YSM12M38V	12	BSP 3/8	24	64
YSM12M12V	12	BSP 1/2	24	62
YSM16M34V	16	BSP 3/4	32	81

TYPE SY — FEMALE THREAD PLUG WITH VALVE

PLUG

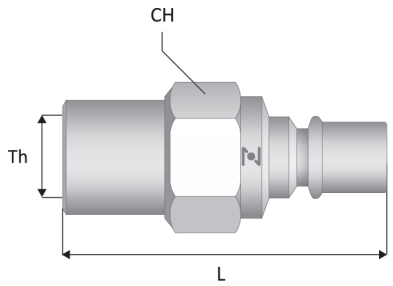

SHUT-OFF VALVE	TYPE	DIMENSIONS		
		TH	CH	L
YSM6F14V	6	BSP 1/4	17	47
YSM9F14V	9	BSP 1/4	19	48
YSM9F38V	9	BSP 3/8	22	49
YSM12F12V	12	BSP 1/2	27	63
YSM16F34V	16	BSP 3/4	32	81

TYPE SY — MALE THREAD PLUG

PLUG

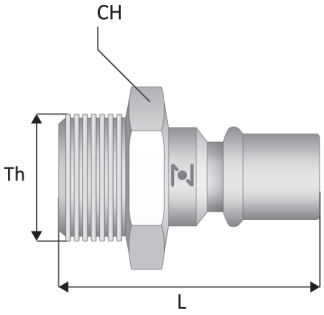

FULL FLOW	SHUT-OFF VALVE	TYPE	DIMENSIONS		
			TH	CH	L
YSM6M38	YSM6M38V	6	BSP 3/8	17	34
YSM9M12	YSM9M12V	9	BSP 1/2	22	37
YSM12M34	YSM12M34V	12	BSP 3/4	27	46
YSM16M1	YSM16M1V	16	BSP 1	35	60

TYPE SY — FEMALE THREAD PLUG WITHOUT VALVE

PLUG

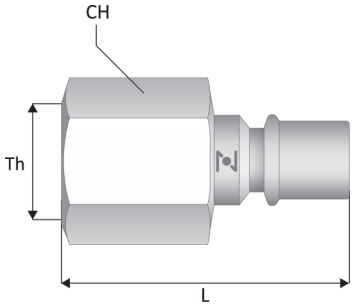

FULL FLOW	TYPE	DIMENSIONS		
		TH	CH	L
YSM6F14	6	BSP 1/4	17	34
YSM9F14	9	BSP 1/4	22	37
YSM9F38	9	BSP 3/8	22	37
YSM12F12	12	BSP 1/2	27	45
YSM16F34	16	BSP 3/4	32	58

TYPE SY — FEMALE THREAD SOCKET WITH VALVE

SOCKET

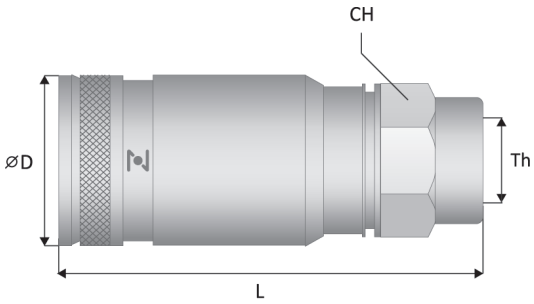

SHUT-OFF VALVE	TYPE	DIMENSIONS			
		TH	CH	ØD	L
YSF20F34V	20	BSP 3/4	42	53	119
YSF20F1V	20	BSP 1	42	53	119
YSF20FN1V	20	NPT 1	42	53	119
YSF25F1V	25	BSP 1	50	60	140
YSF25F114V	25	BSP 1 1/4	50	60	140
YSF38F112V	38	BSP 1 1/2	70	82	158
YSF38F2V	38	BSP 2	70	82	158

TYPE SY — MALE THREAD SOCKET WITH VALVE

SOCKET

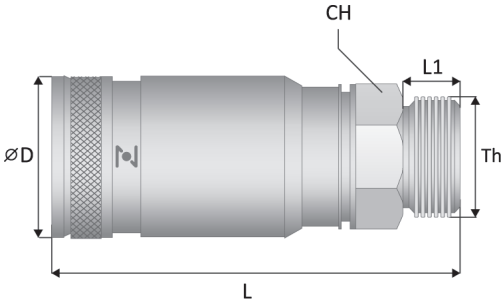

SHUT-OFF VALVE	TYPE	DIMENSIONS				
		TH	CH	ØD	L	L1
YSF20M1V	20	BSP 1	41	53	132	20
YSF20MN1V	20	NPT 1	41	53	132	20
YSF25M114V	25	BSP 1 1/4	50	60	144	21
YSF25MN114V	25	NPT 1 1/4	50	60	144	21
YSF38M112V	38	BSP 1 1/2	70	82	167	24

TYPE SY — MALE THREAD PLUG WITH VALVE

PLUG

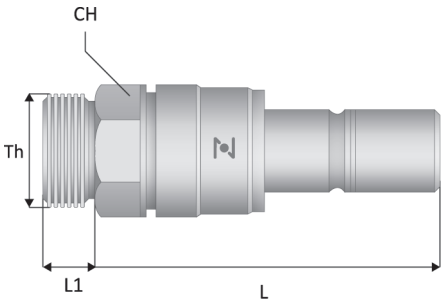

SHUT-OFF VALVE	TYPE	DIMENSIONS			
		TH	CH	L	L1
YSM20M1V	20	BSP 1	41	142	19
YSM20MN1V	20	NPT 1	41	142	19
YSM25M114V	25	BSP 1 1/4	50	153	21
YSM38M112V	38	BSP 1 1/2	70	156	24
YSM38M2V	38	BSP 2	70	161	24

TYPE SY — FEMALE THREAD PLUG WITH VALVE

PLUG

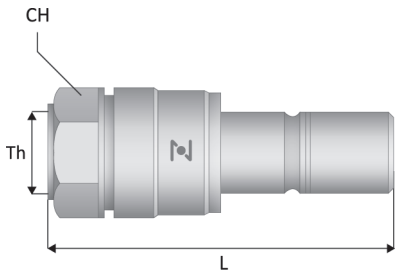

SHUT-OFF VALVE	TYPE	DIMENSIONS		
		TH	CH	L
YSM20F34V	20	BSP 3/4	41	126
YSM20F1V	20	BSP 1	41	126
YSM20FN1V	20	NPT 1	41	126
YSM25F1V	25	BSP 1	50	148
YSM25F114V	25	BSP 1 1/4	50	148
YSM38F112V	38	BSP 1 1/2	70	156
YSM38F2V	38	BSP 2	70	156

ZONACENTRO

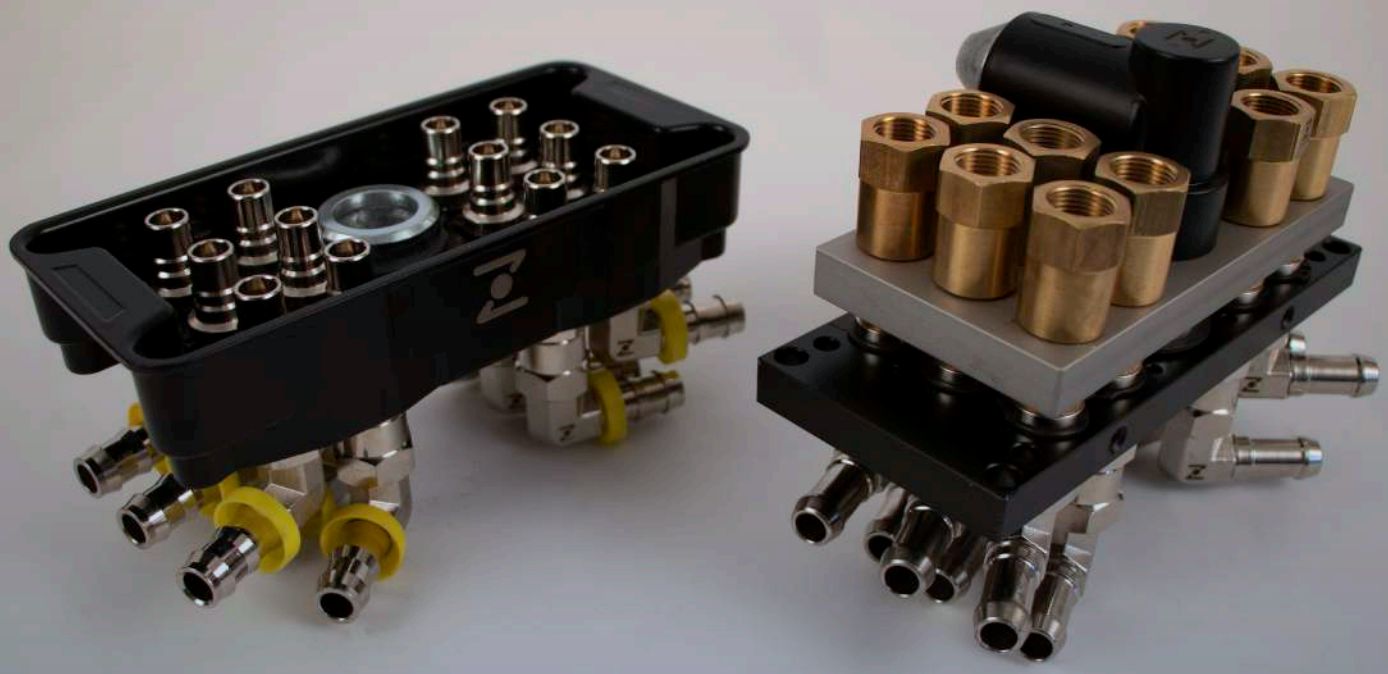

MOULDING EQUIPMENTS AND MULTICOUPLINGS

TYPE YM - MOULD EQUIPMENTS

TYPE YP - PRESS EQUIPMENTS

WORKING PRESSURE

15 BAR (145 PSI)

TEMPERATURE RANGE

- 20º C + 100º C

TYPE YM9 — MOULD EQUIPMENT WITH COUPLINGS

MOULD PLATE 5/5 CIRCUITS

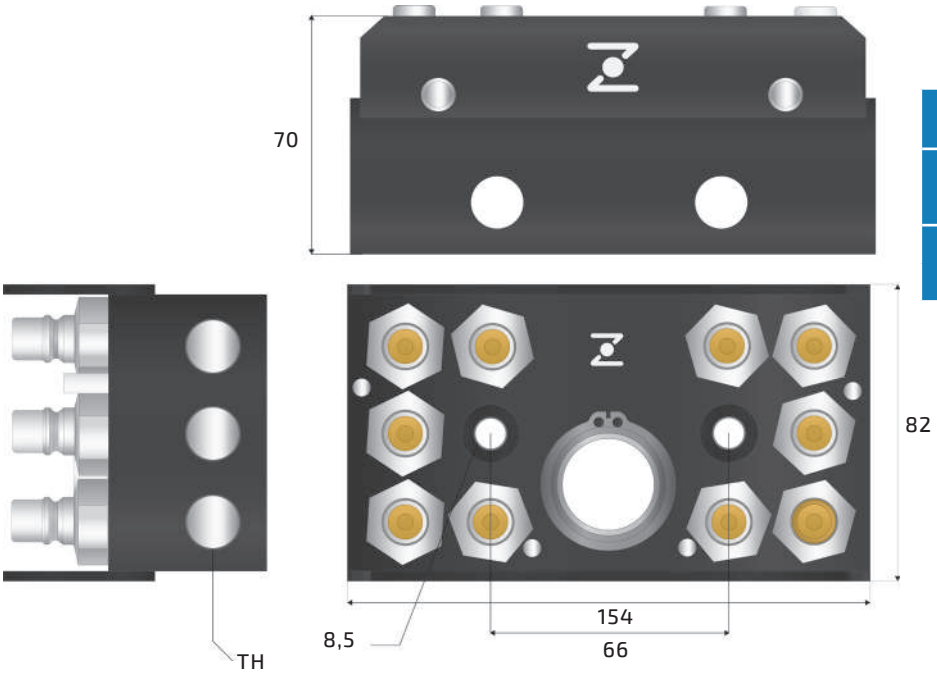

PLATE WITH PLUGS		
	REFERENCE	TH
SHUT-OFF VALVE	YSM910BV	BSP 3/8
	REFERENCE	TH
FULL FLOW	YSM910B	BSP 3/8

TYPE YP9 — PRESS EQUIPMENT WITH COUPLINGS

MOBILE PLATE 5/5 CIRCUITS

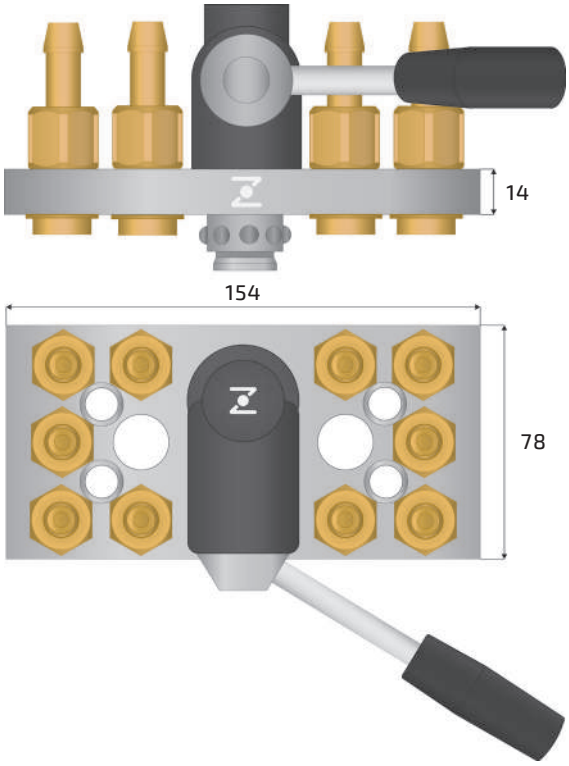

PLATE WITH PLUGS		
	REFERENCE	HOSE
SHUT-OFF VALVE	YPS910M10V	10
	REFERENCE	HOSE
FULL FLOW	YPS910M10	10
	REFERENCE	HOSE
SHUT-OFF VALVE	YPS910M13V	13
	REFERENCE	HOSE
FULL FLOW	YPS910M13	13

TYPE YP 9 — PRESS EQUIPMENT WITH COUPLINGS

MOBILE PLATE 5/5 CIRCUITS

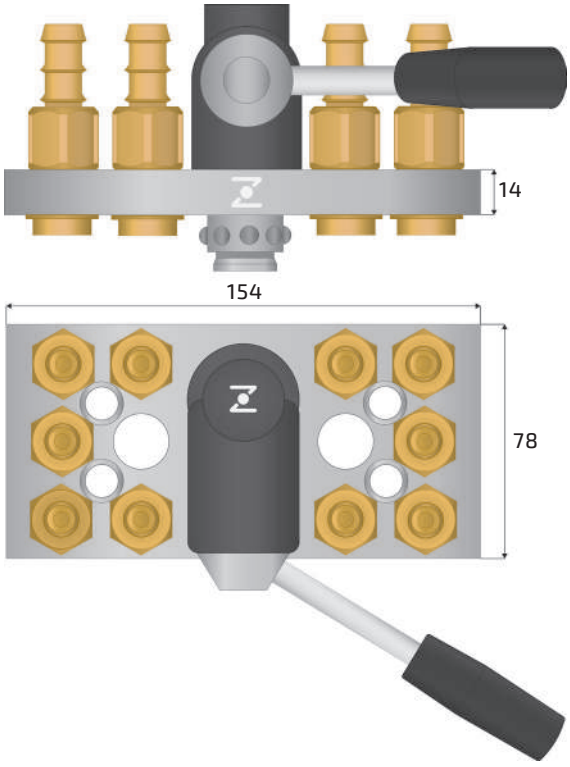

PLATE WITH PLUGS		
	REFERENCE	HOSE
SHUT-OFF VALVE	YPS910ML10V	10
	REFERENCE	HOSE
FULL FLOW	YPS910ML10	10
	REFERENCE	HOSE
SHUT-OFF VALVE	YPS910ML13V	13
	REFERENCE	HOSE
FULL FLOW	YPS910ML13	13

TYPE YP9 — PRESS EQUIPMENT WITH COUPLINGS

MOBILE PLATE 5/5 CIRCUITS

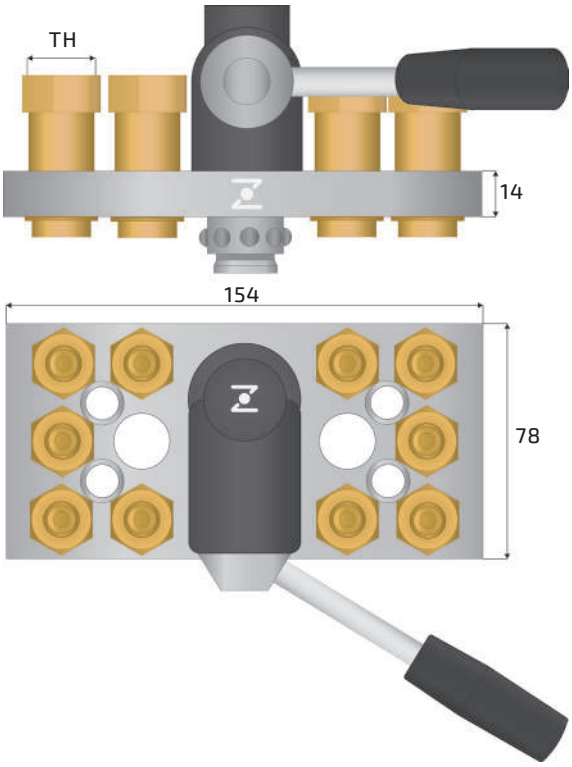

PLATE WITH PLUGS		
	REFERENCE	TH
SHUT-OFF VALVE	YPS910F38V	BSP 3/8
	REFERENCE	TH
FULL FLOW	YPS910F38	BSP 3/8

TYPE YM9 — MOULD EQUIPMENT

MOULD PLATE 6/6 CIRCUITS

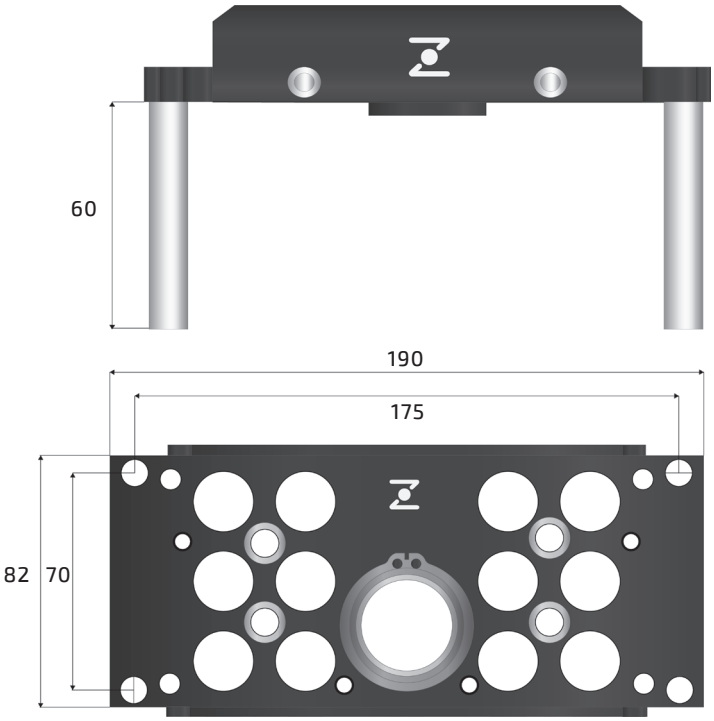

PLATE WITHOUT PLUGS	
REFERENCE	YM912

PLATE WITH PLUGS	
SHUT-OFF VALVE	YM912P12V
FULL FLOW	YM912P12

TYPE YM9 — MOULD EQUIPMENT

MOULD PLATE 6/6 CIRCUITS

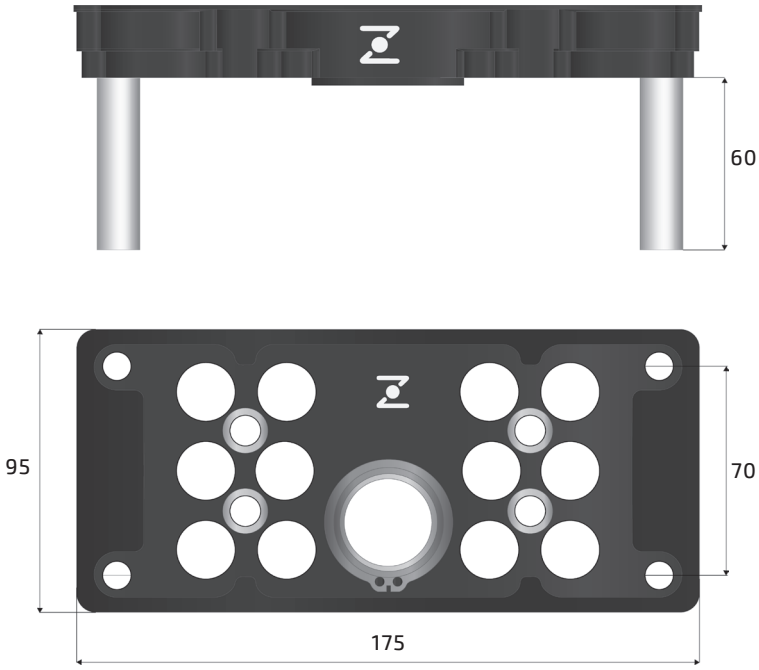

PLATE WITHOUT PLUGS	
REFERENCE	YM912M

PLATE WITH PLUGS	
SHUT-OFF VALVE	YM912MP12V
FULL FLOW	YM912MP12

TYPE YP9 — PRESS EQUIPMENT WITH COUPLINGS

MOBILE PLATE 6/6 CIRCUITS

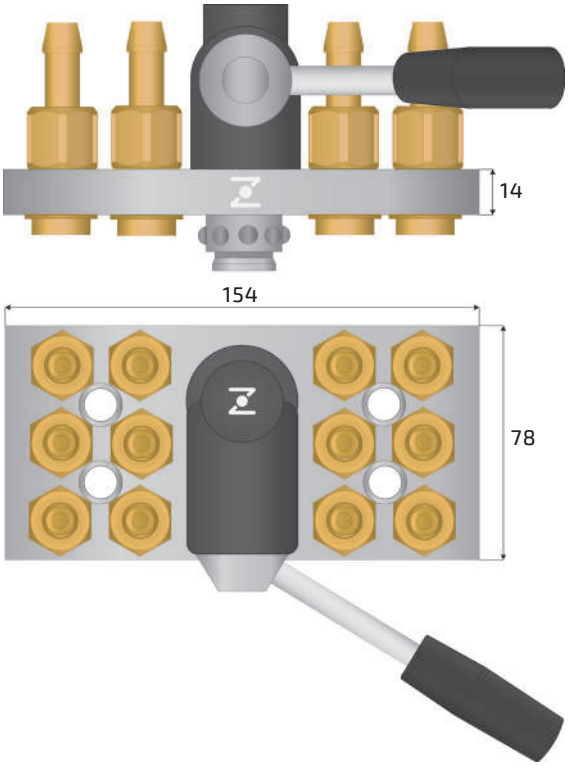

PLATE WITH PLUGS		
	REFERENCE	HOSE
SHUT-OFF VALVE	YPS912M10V	10
	REFERENCE	HOSE
FULL FLOW	YPS912M10	10
	REFERENCE	HOSE
SHUT-OFF VALVE	YPS912M13V	13
	REFERENCE	HOSE
FULL FLOW	YPS912M13	13

TYPE YP9 — PRESS EQUIPMENT WITH COUPLINGS

MOBILE PLATE 6/6 CIRCUITS

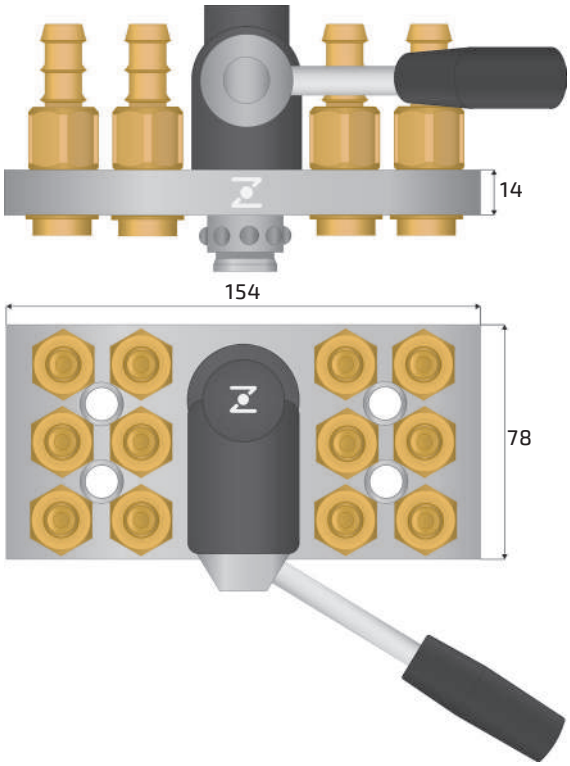

PLATE WITH PLUGS		
	REFERENCE	HOSE
SHUT-OFF VALVE	YPS912ML10V	10
	REFERENCE	HOSE
FULL FLOW	YPS912ML10	10
	REFERENCE	HOSE
SHUT-OFF VALVE	YPS912ML13V	13
	REFERENCE	HOSE
FULL FLOW	YPS912ML13	13

TYPE YP9 — PRESS EQUIPMENT WITH COUPLINGS

MOBILE PLATE 6/6 CIRCUITS

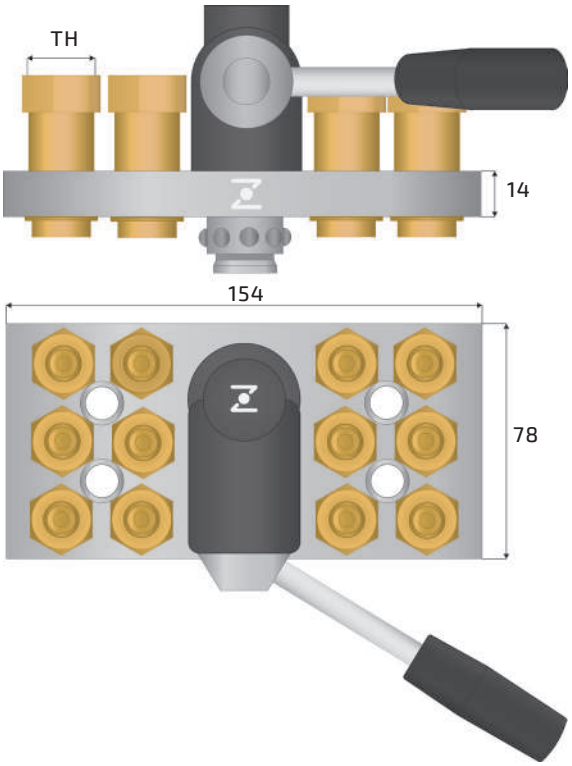

PLATE WITH PLUGS		
	REFERENCE	TH
SHUT-OFF VALVE	YPS912F38V	BSP 3/8
	REFERENCE	TH
FULL FLOW	YPS912F38	BSP 3/8

TYPE YP9 — PRESS EQUIPMENT WITH COUPLINGS

MOBILE PLATE 6/6 CIRCUITS

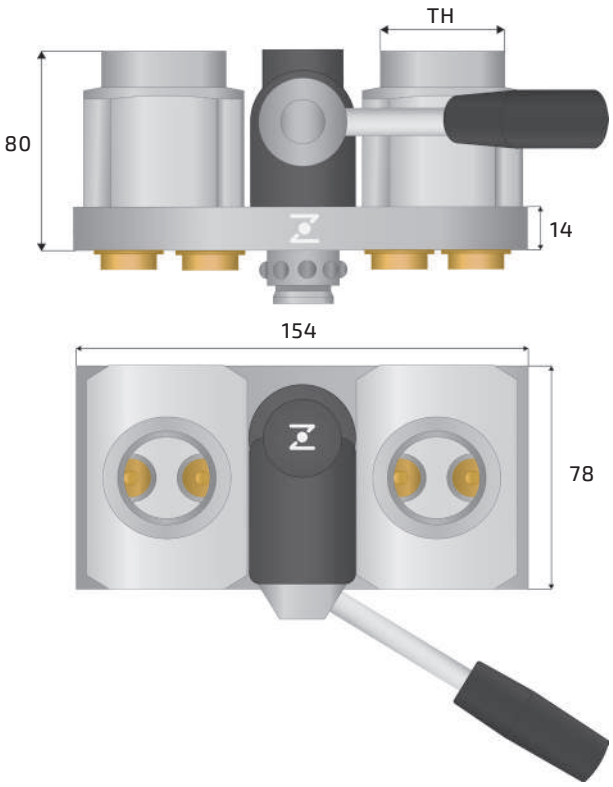

PLATE WITH PLUGS		
	REFERENCE	TH
SHUT-OFF VALVE	YPS912PF1V	BSP 1

TYPE YM9 — MOULD EQUIPMENT

MOULD PLATE 10/10 CIRCUITS

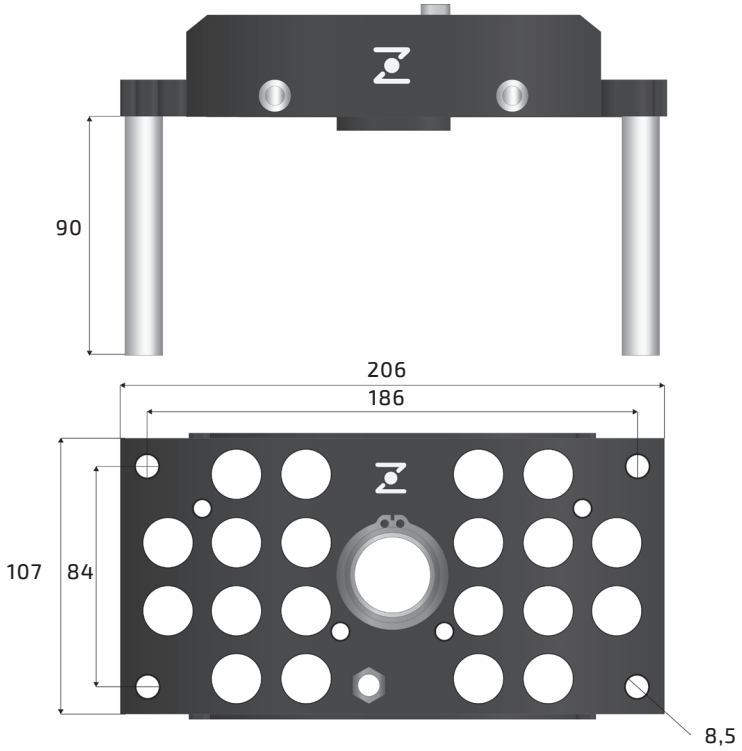

PLATE WITHOUT PLUGS	
REFERENCE	YM920

PLATE WITH PLUGS	
SHUT-OFF VALVE	YM920P20V
FULL FLOW	YM920P20

TYPE YP9 — PRESS EQUIPMENT WITH COUPLINGS

MOBILE PLATE 10/10 CIRCUITS

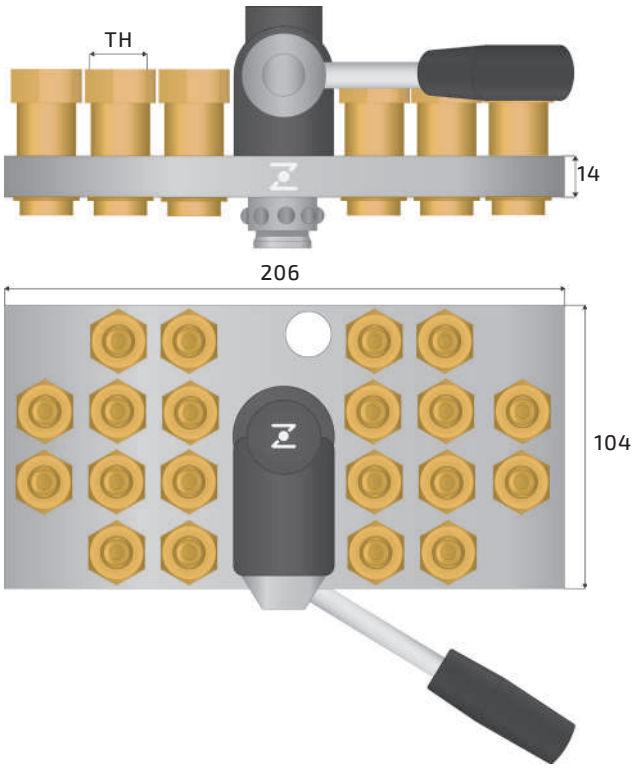

PLATE WITH PLUGS		
	REFERENCE	TH
SHUT-OFF VALVE	YPS920F38V	BSP 3/8
	REFERENCE	TH
FULL FLOW	YPS920F38	BSP 3/8

TYPE YP9 — PRESS EQUIPMENT WITH COUPLINGS

MOBILE PLATE 10/10 CIRCUITS

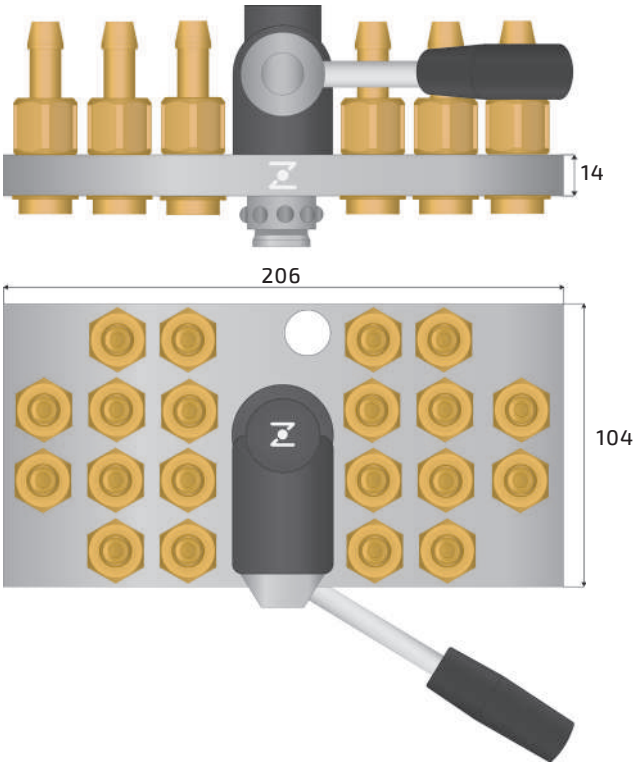

PLATE WITH PLUGS		
SHUT-OFF VALVE	REFERENCE	HOSE
	YPS920M10V	10
FULL FLOW	REFERENCE	HOSE
	YPS920M10	10
SHUT-OFF VALVE	REFERENCE	HOSE
	YPS920M13V	13
FULL FLOW	REFERENCE	HOSE
	YPS920M13	13

TYPE YP9 — PRESS EQUIPMENT WITH COUPLINGS

MOBILE PLATE 10/10 CIRCUITS

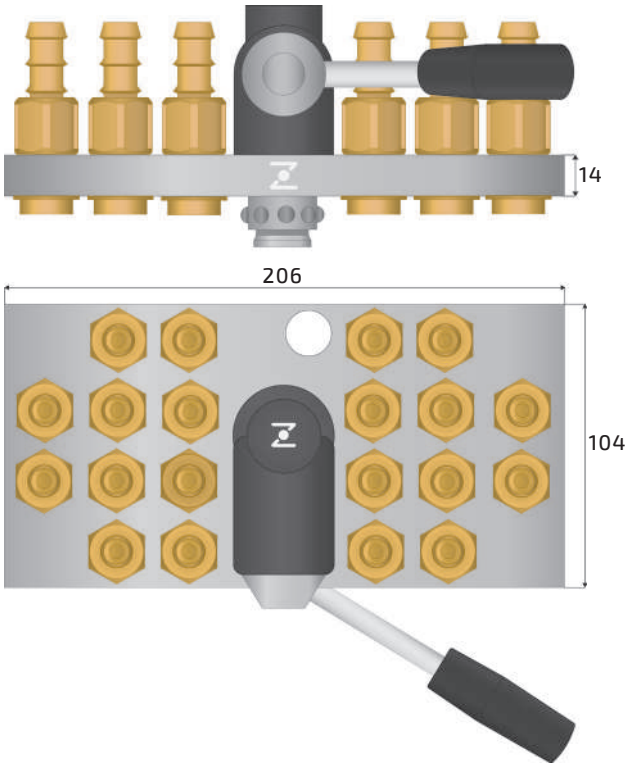

PLATE WITH PLUGS		
SHUT-OFF VALVE	REFERENCE	HOSE
	YPS920ML10V	10
FULL FLOW	REFERENCE	HOSE
	YPS920ML10	10
SHUT-OFF VALVE	REFERENCE	HOSE
	YPS920ML13V	13
FULL FLOW	REFERENCE	HOSE
	YPS920ML13	13

TYPE YM9 — FEMALE THREAD PLUG

PLUG

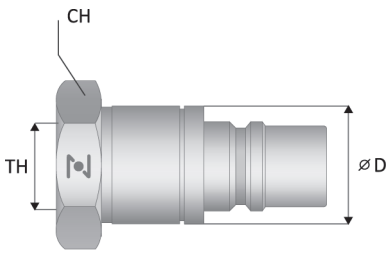

FULL FLOW	SHUT-OFF VALVE	DIMENSIONS		
		TH	CH	ØD
YM9F38	YM9F38V	BSP 3/8	22	19

TYPE YM9 — MALE THREAD PLUG

PLUG

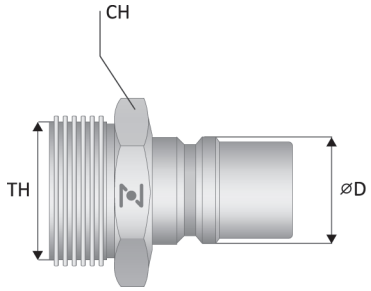

FULL FLOW	SHUT-OFF VALVE	DIMENSIONS		
		TH	CH	ØD
YSM9M12	YSM9M12V	BSP 1/2	22	14

TYPE YM9 — EXTENSION FEMALE/MALE 3/8" BSP

EXTENSION

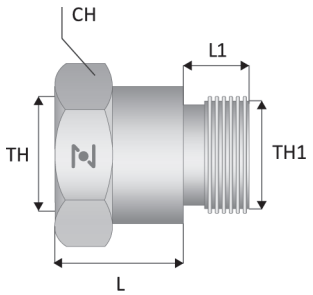

REFERENCE	MOULD EQUIP.	DIMENSIONS				
		TH	TH1	CH	L	L1
YE9MF38	YM9	BSP 3/8	BSP 3/8	22	33	12

TYPE YM9 — ELBOW FOR FLEXIBLE HOSE

ELBOW

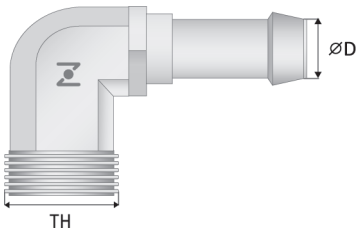

REFERENCE	MOULD EQUIP.	ØD	TH
YE938M10	YM9	10	BSP 3/8
YE938M13	YM9	13	BSP 3/8

NEED CLAMP

TYPE YM9 — ELBOW FOR PUSH-LOCK HOSE

ELBOW

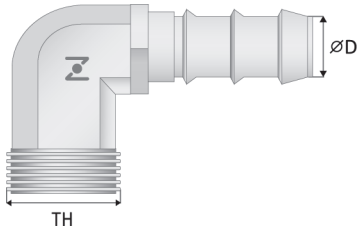

REFERENCE	MOULD EQUIP.	Ø D	TH
YE938ML10	YM9	10	BSP 3/8
YE938ML13	YM9	13	BSP 3/8

NO CLAMP NEEDED

TYPE YP9 — PRESS SOCKET FOR FLEXIBLE HOSE

SOCKET

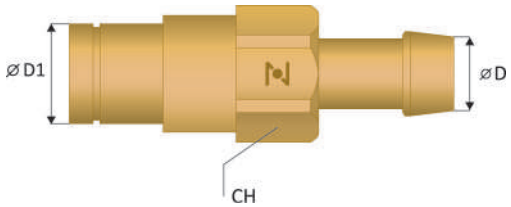

FULL FLOW	SHUT-OFF VALVE	PRESS EQUIP.	DIMENSIONS		
			Ø D	Ø D1	CH
YPS9M10	YPS9M10V	YP9	10	19	22
YPS9M13	YPS9M13V	YP9	13	19	22

NEED CLAMP

TYPE YP9 — PRESS SOCKET FOR PUSH-LOCK HOSE

SOCKET

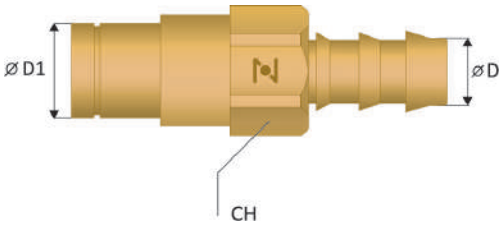

FULL FLOW	SHUT-OFF VALVE	PRESS EQUIP.	DIMENSIONS		
			Ø D	Ø D1	CH
YPS9ML 10	YPS9ML10V	YP9	10	19	22
YPS9ML13	YPS9ML13V	YP9	13	19	22

NO CLAMP NEEDED

TYPE YP9 — PRESS SOCKET FEMALE THREAD

SOCKET

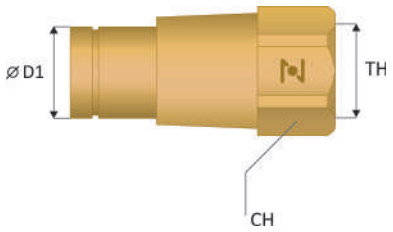

FULL FLOW	SHUT-OFF VALVE	PRESS EQUIP.	DIMENSIONS		
			TH	Ø D1	CH
YPS9F38	YPS9F38V	YP9	BSP 3/8	19	22

TYPE YM12 — MOULD EQUIPMENT WITH COUPLINGS

MOULD PLATE 5/5 CIRCUITS

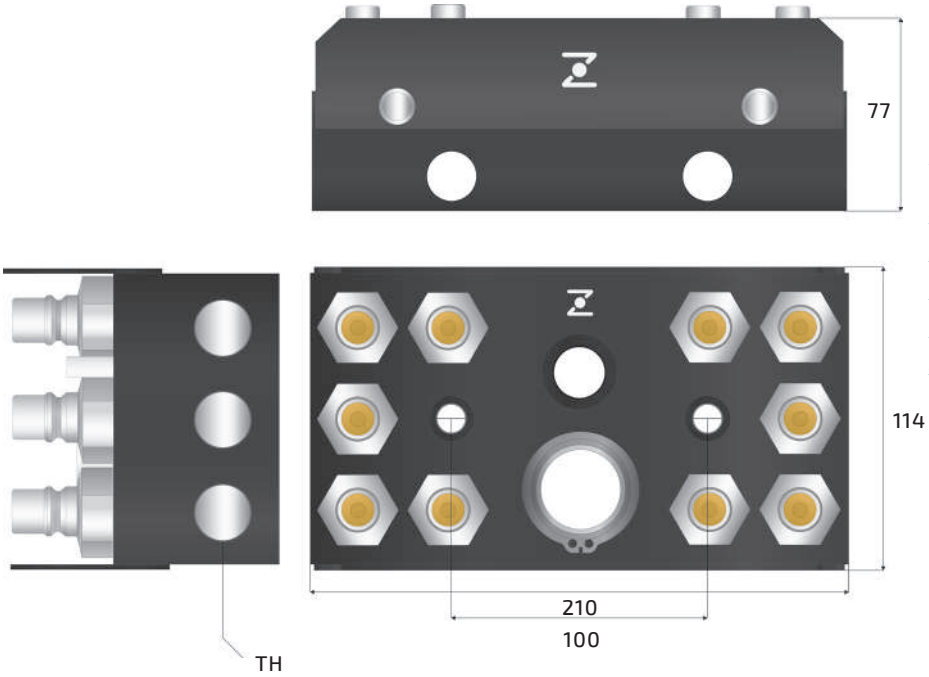

PLATE WITH PLUGS		
SHUT-OFF VALVE	REFERENCE	TH
	YMP1210BV	BSP 1/2
FULL FLOW	REFERENCE	TH
	YMP1210B	BSP 1/2

TYPE YP12 — PRESS EQUIPMENT WITH COUPLINGS

MOBILE PLATE 5/5 CIRCUITS

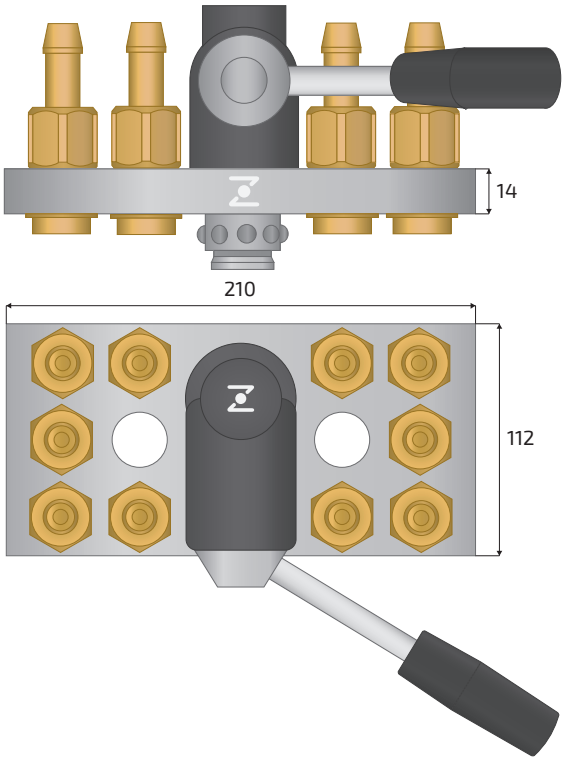

PLATE WITH PLUGS		
SHUT-OFF VALVE	REFERENCE	HOSE
	YPS1210M13V	13
FULL FLOW	REFERENCE	HOSE
	YPS1210M13	13
SHUT-OFF VALVE	REFERENCE	HOSE
	YPS1210M16V	16
FULL FLOW	REFERENCE	HOSE
	YPS1210M16	16

TYPE YP12 — PRESS EQUIPMENT WITH COUPLINGS

MOBILE PLATE 5/5 CIRCUITS

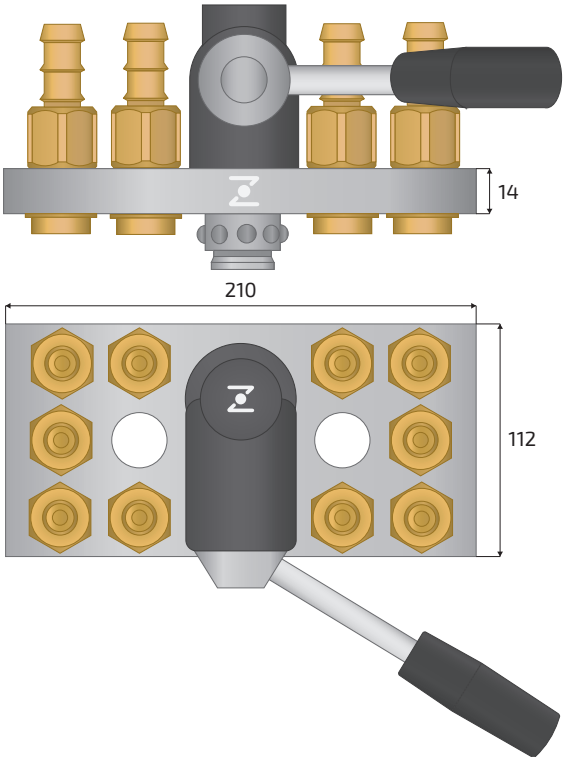

PLATE WITH PLUGS		
SHUT-OFF VALVE	REFERENCE	HOSE
	YPS1210ML13V	13
FULL FLOW	REFERENCE	HOSE
	YPS1210ML13	13
SHUT-OFF VALVE	REFERENCE	HOSE
	YPS1210ML16V	16
FULL FLOW	REFERENCE	HOSE
	YPS1210ML16	16

TYPE YP12 — PRESS EQUIPMENT WITH COUPLINGS

MOBILE PLATE 5/5 CIRCUITS

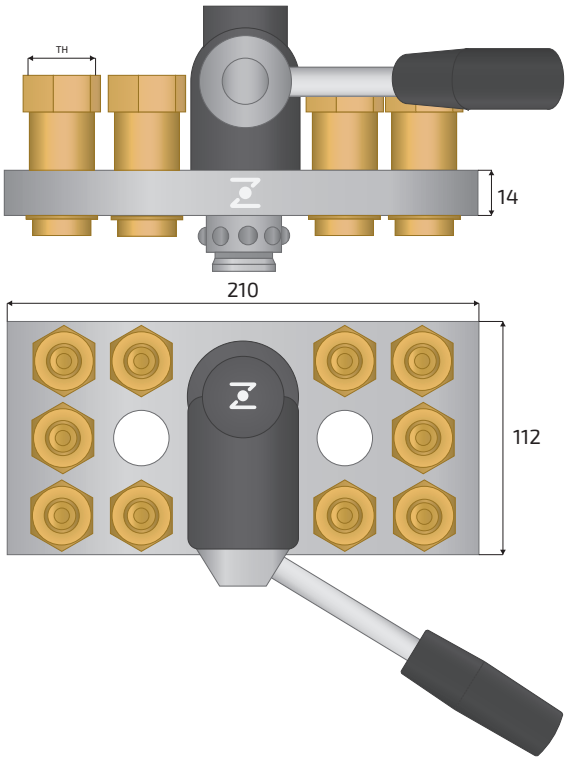

PLATE WITH PLUGS		
SHUT-OFF VALVE	REFERENCE	TH
	YPS1210F12V	BSP 1/2
FULL FLOW	REFERENCE	TH
	YPS1210F12	BSP 1/2

TYPE YM12 — FEMALE THREAD PLUG

PLUG

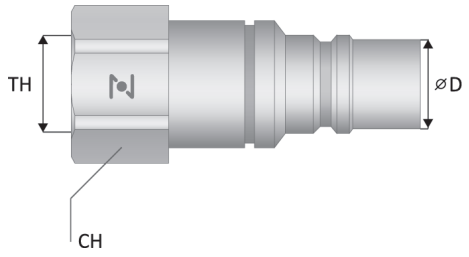

FULL FLOW	SHUT-OFF VALVE	MOUD EQUIP.	DIMENSIONS		
			TH	ØD	CH
YM12F12	YM12F12V	YM12	BSP 1/2	24	24

TYPE YM12 — MALE THREAD PLUG

PLUG

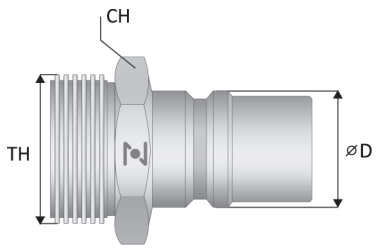

FULL FLOW	SHUT-OFF VALVE	MOUD EQUIP.	DIMENSIONS		
			TH	ØD	CH
YM12M34	YM12M34V	YM12	BSP 3/4	28	24

TYPE YM12 — EXTENSION FEMALE/MALE 1/2 BSP

EXTENSION

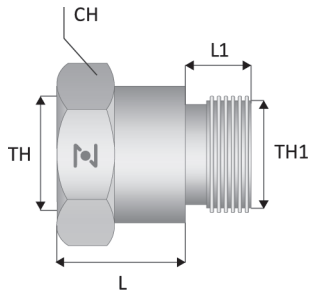

REFERENCE	MOUD EQUIP.	DIMENSIONS				
		TH	TH1	CH	L	L1
YE12MF12	YM12	BSP 1/2	BSP 1/2	27	45	22

TYPE YM12 — ELBOW FOR FLEXIBLE HOSE

ELBOW

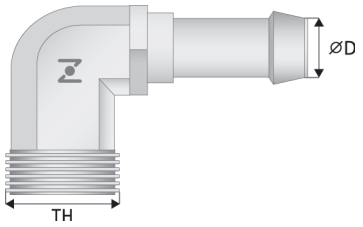

REFERENCE	MOULD EQUIP.	Ø D	TH
YE1212M13	YM12	13	BSP 1/2
YE1212M16	YM12	16	BSP 1/2

NEED CLAMP

TYPE YM12 — ELBOW FOR PUSH-LOCK

ELBOW

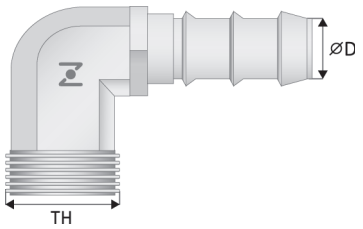

REFERENCE	MOULD EQUIP.	Ø D	TH
YE1212ML13	YM12	13	BSP 1/2
YE1212ML16	YM12	16	BSP 1/2

NO CLAMP NEEDED

TYPE YP12 — PRESS SOCKET FOR FLEXIBLE HOSE

SOCKET

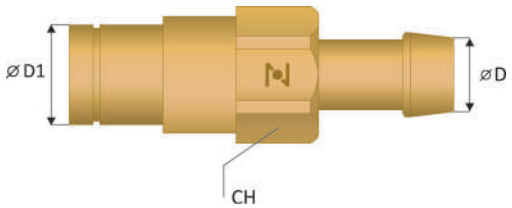

FULL FLOW	SHUT-OFF VALVE	PRESS EQUIP.	DIMENSIONS		
			Ø D	ØD1	CH
YPS12M13	YPS12M13V	YP12	13	24	27
YPS12M16	YPS12M16V	YP12	16	24	27

NEED CLAMP

TYPE YP12 — PRESS SOCKET FOR PUSH-LOCK HOSE

SOCKET

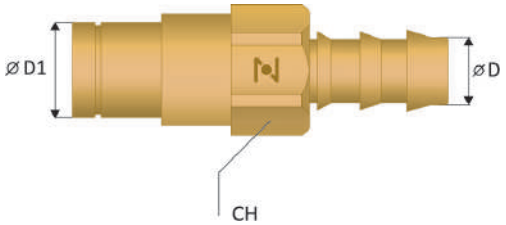

FULL FLOW	SHUT-OFF VALVE	PRESS EQUIP.	DIMENSIONS		
			Ø D	ØD1	CH
YPS12ML13	YPS12ML13V	YP12	13	24	27
YPS12ML16	YPS12ML16V	YP12	16	24	27

NO CLAMP NEEDED

TYPE YP12 — PRESS SOCKET FEMALE THREAD

SOCKET

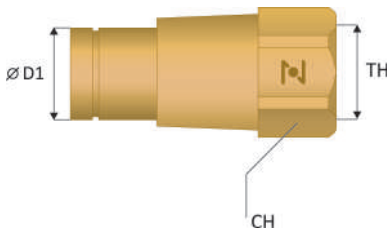

FULL FLOW	SHUT-OFF VALVE	PRESS EQUIP.	DIMENSIONS		
			TH	ØD1	CH
YPS12F12	YPS12F12V	YP12	BSP 1/2	24	27

TYPE YM16 — MOULD EQUIPMENT WITH COUPLINGS

MOULD PLATE 6/6 CIRCUITS

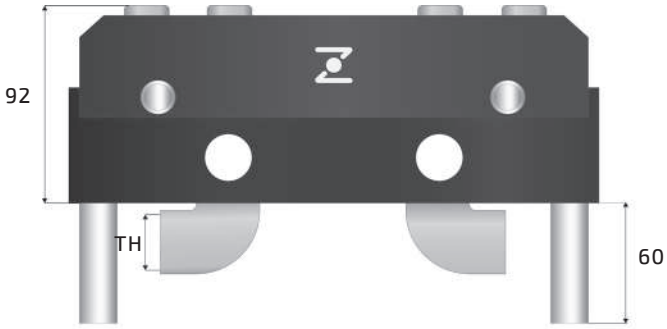

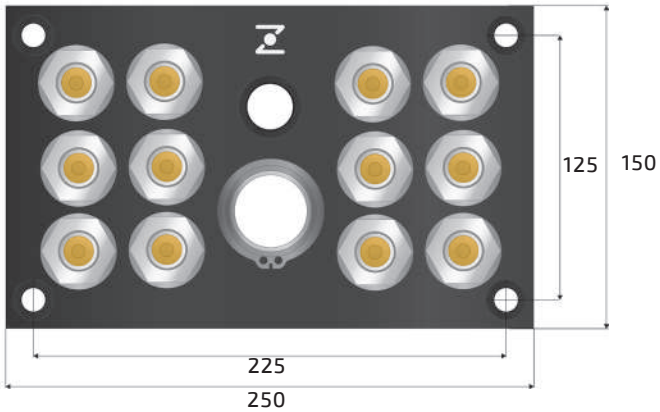

PLATE WITH PLUGS		
	REFERENCE	TH
SHUT-OFF VALVE	YSM1612BV	BSP 3/4
	REFERENCE	TH
FULL FLOW	YSM1612B	BSP 3/4

TYPE YM16 — MALE THREAD PLUG

PLUG

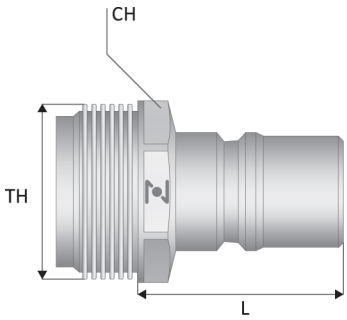

FULL FLOW	SHUT-OFF VALVE	DIMENSIONS		
		TH	CH	L
YSM16M1	YSM16M1V	BSP 1	36	39

ZONACENTRO

HYDRAULIC MULTICOUPLINGS

TYPE MH8 — MOULD EQUIPMENTS WITH COUPLINGS

MOULD PLATE 1/1 CIRCUITS

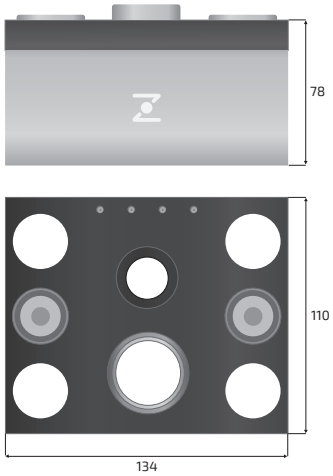

PLATE WITH 2 COUPLINGS	
REFERENCE	FEMALE THREAD
MH8.02RF38	BSP 3/8
MH8.02RF12	BSP 1/2
MH8.02RFN38	NPT 3/8
MH8.02RFN12	NPT 1/2

TYPE PH8 — PRESS EQUIPMENT WITH COUPLINGS

MOBILE PLATE 1/1 CIRCUITS

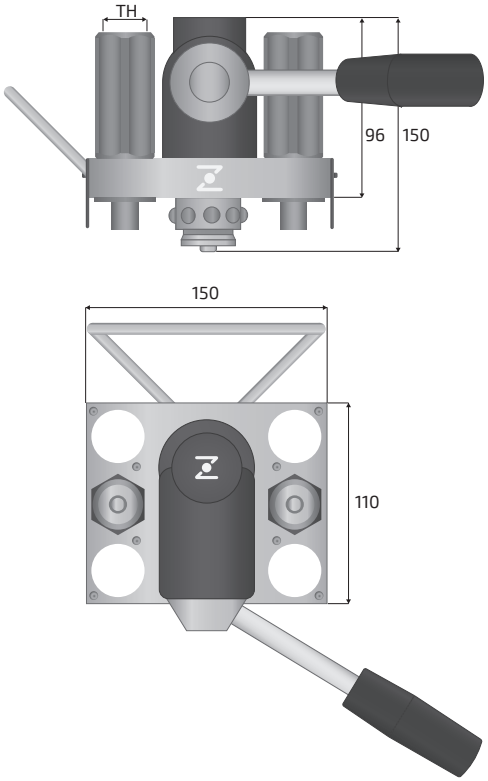

PLATE WITH 2 COUPLINGS	
REFERENCE	FEMALE THREAD
PH8.02RF38	BSP 3/8
PH8.02RF12	BSP 1/2
PH8.02RFN38	NPT 3/8
PH8.02RFN12	NPT 1/2

TYPE MH8 — MOULD EQUIPMENTS WITH COUPLINGS

MOULD PLATE 2/2 CIRCUITS

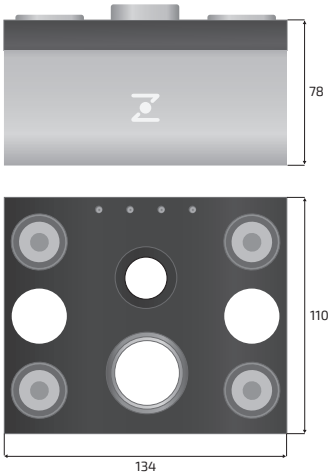

PLATE WITH 4 COUPLINGS	
REFERENCE	FEMALE THREAD
MH8.04RF38	BSP 3/8
MH8.04RF12	BSP 1/2
MH8.04RFN38	NPT 3/8
MH8.04RFN12	NPT 1/2

TYPE PH8 — PRESS EQUIPMENT WITH COUPLINGS

MOBILE PLATE 2/2 CIRCUITS

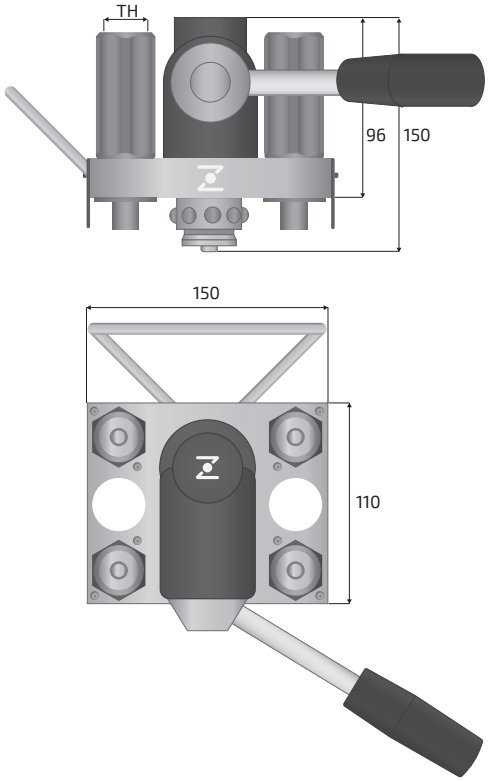

PLATE WITH 4 COUPLINGS	
REFERENCE	FEMALE THREAD
PH8.04RF38	BSP 3/8
PH8.04RF12	BSP 1/2
PH8.04RFN38	NPT 3/8
PH8.04RFN12	NPT 1/2

TYPE MH8 — MOULD EQUIPMENTS WITH COUPLINGS

MOULD PLATE 3/3 CIRCUITS

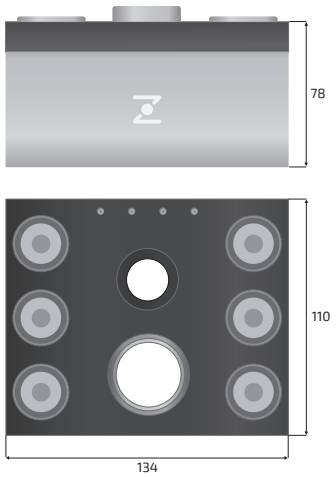

PLATE WITH 6 COUPLINGS	
REFERENCE	FEMALE THREAD
MH8.06RF38	BSP 3/8
MH8.06RF12	BSP 1/2
MH8.06RFN38	NPT 3/8
MH8.06RFN12	NPT 1/2

TYPE PH8 — PRESS EQUIPMENT WITH COUPLINGS

MOBILE PLATE 3/3 CIRCUITS

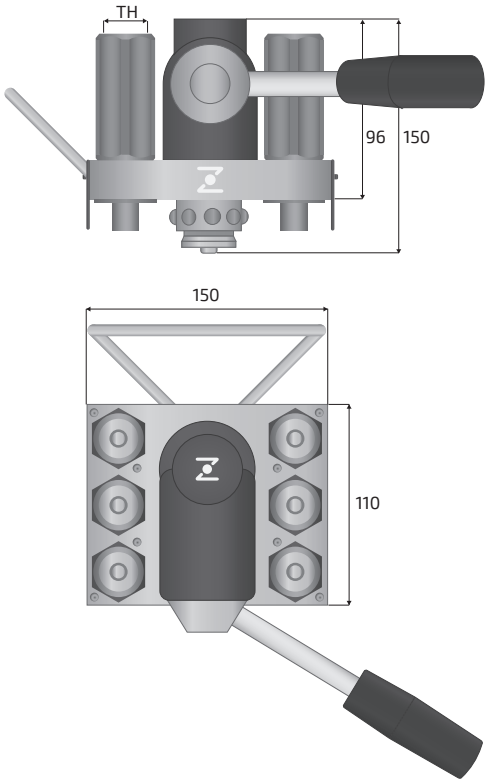

PLATE WITH 6 COUPLINGS	
REFERENCE	FEMALE THREAD
PH8.06RF38	BSP 3/8
PH8.06RF12	BSP 1/2
PH8.06RFN38	NPT 3/8
PH8.06RFN12	NPT 1/2

TYPE MHR8 — MOULD EQUIPMENTS WITH COUPLINGS

MOULD PLATE 1/1 CIRCUITS

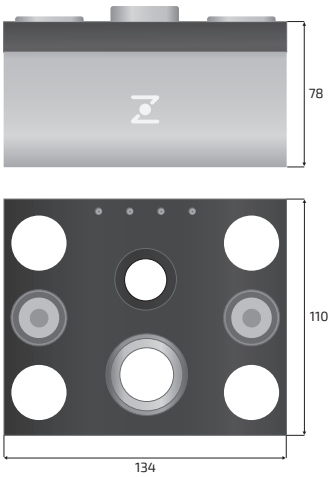

PLATE WITH 2 COUPLINGS	
REFERENCE	FEMALE THREAD
MHR8.02RF38	BSP 3/8
MHR8.02RF12	BSP 1/2
MHR8.02RFN38	NPT 3/8
MHR8.02RFN12	NPT 1/2

TYPE PHR8 — PRESS EQUIPMENT WITH COUPLINGS

MOBILE PLATE 1/1 CIRCUITS

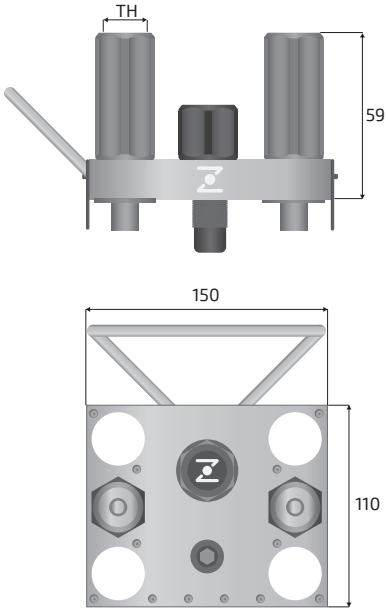

PLATE WITH 2 COUPLINGS	
REFERENCE	FEMALE THREAD
PHR8.02RF38	BSP 3/8
PHR8.02RF12	BSP 1/2
PHR8.02RFN38	NPT 3/8
PHR8.02RFN12	NPT 1/2

TYPE MHR8 — MOULD EQUIPMENTS WITH COUPLINGS

MOULD PLATE 2/2 CIRCUITS

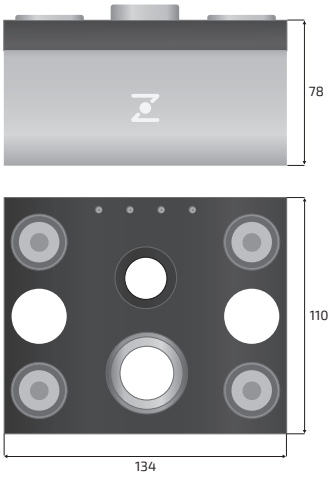

PLATE WITH 4 COUPLINGS	
REFERENCE	FEMALE THREAD
MHR8.04RF38	BSP 3/8
MHR8.04RF12	BSP 1/2
MHR8.04RFN38	NPT 3/8
MHR8.04RFN12	NPT 1/2

TYPE PHR8 — PRESS EQUIPMENT WITH COUPLINGS

MOBILE PLATE 2/2 CIRCUITS

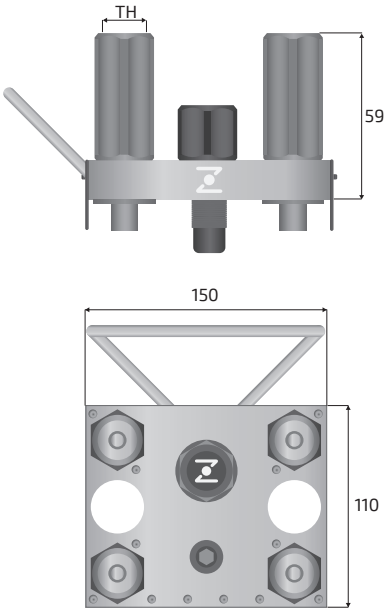

PLATE WITH 4 COUPLINGS	
REFERENCE	FEMALE THREAD
PHR8.04RF38	BSP 3/8
PHR8.04RF12	BSP 1/2
PHR8.04RFN38	NPT 3/8
PHR8.04RFN12	NPT 1/2

TYPE MHR8 — MOULD EQUIPMENTS WITH COUPLINGS

MOULD PLATE 3/3 CIRCUITS

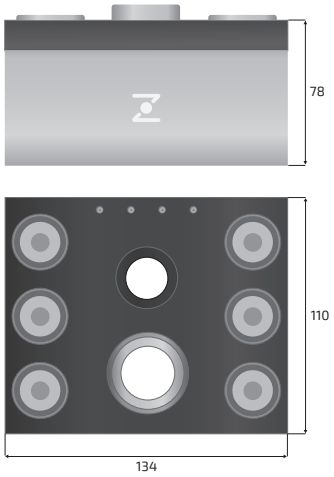

PLATE WITH 6 COUPLINGS	
REFERENCE	FEMALE THREAD
MHR8.06RF38	BSP 3/8
MHR8.06RF12	BSP 1/2
MHR8.06RFN38	NPT 3/8
MHR8.06RFN12	NPT 1/2

TYPE PHR8 — PRESS EQUIPMENT WITH COUPLINGS

MOBILE PLATE 3/3 CIRCUITS

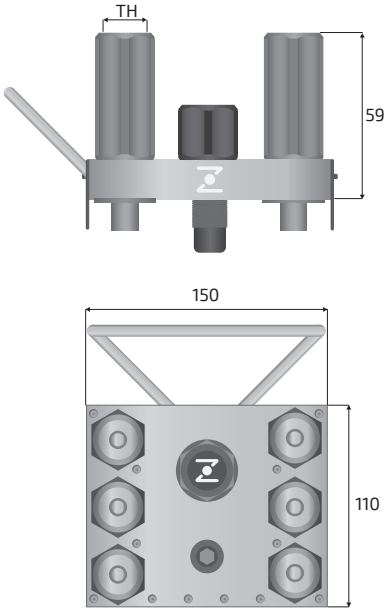

PLATE WITH 6 COUPLINGS	
REFERENCE	FEMALE THREAD
PHR8.06RF38	BSP 3/8
PHR8.06RF12	BSP 1/2
PHR8.06RFN38	NPT 3/8
PHR8.06RFN12	NPT 1/2

TYPE MH9 — MOULD EQUIPMENTS WITH COUPLINGS

MOULD PLATE 1/1 CIRCUITS

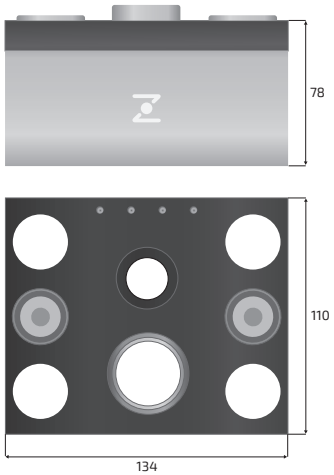

PLATE WITH 2 COUPLINGS	
REFERENCE	FEMALE THREAD
MH9.02RF38	BSP 3/8
MH9.02RF12	BSP 1/2
MH9.02RFN38	NPT 3/8
MH9.02RFN12	NPT 1/2

TYPE PH9 — PRESS EQUIPMENT WITH COUPLINGS

MOBILE PLATE 1/1 CIRCUITS

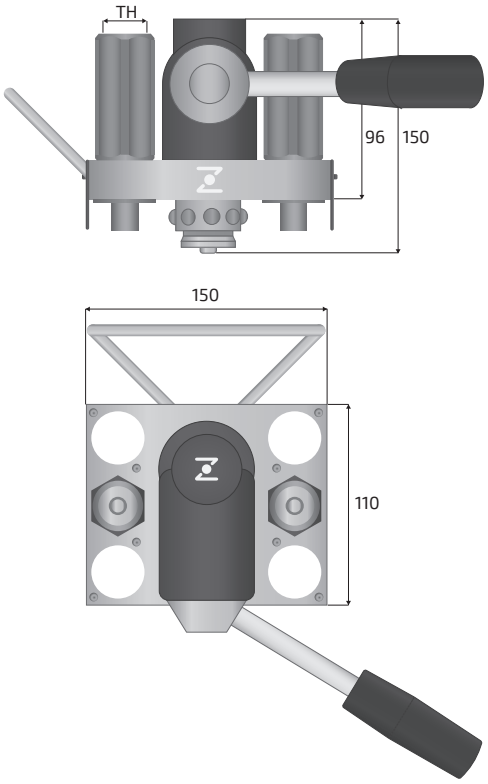

PLATE WITH 2 COUPLINGS	
REFERENCE	FEMALE THREAD
PH9.02RF38	BSP 3/8
PH9.02RF12	BSP 1/2
PH9.02RFN38	NPT 3/8
PH9.02RFN12	NPT 1/2

TYPE MH9 — MOULD EQUIPMENTS WITH COUPLINGS

MOULD PLATE 2/2 CIRCUITS

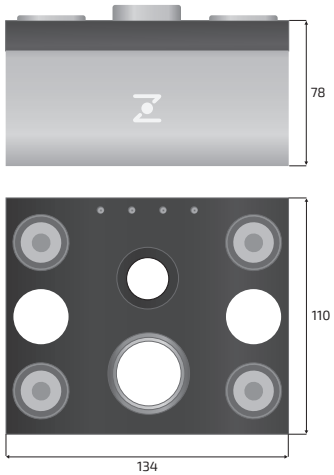

PLATE WITH 4 COUPLINGS	
REFERENCE	FEMALE THREAD
MH9.04RF38	BSP 3/8
MH9.04RF12	BSP 1/2
MH9.04RFN38	NPT 3/8
MH9.04RFN12	NPT 1/2

TYPE PH9 — PRESS EQUIPMENT WITH COUPLINGS

MOBILE PLATE 2/2 CIRCUITS

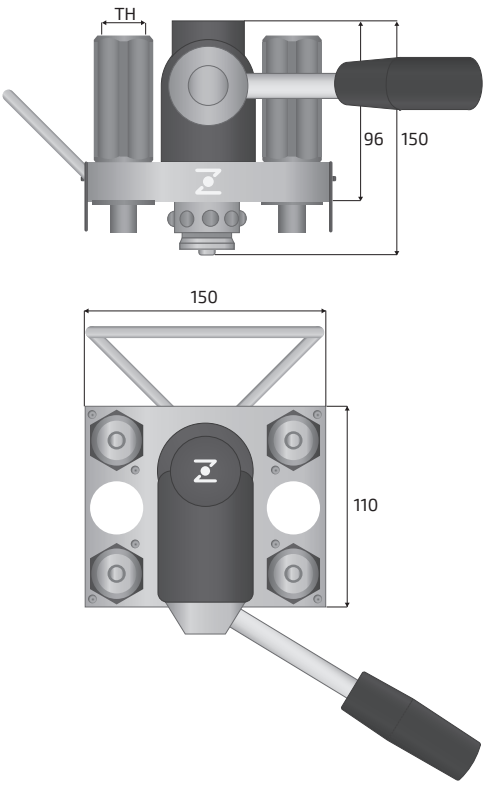

PLATE WITH 4 COUPLINGS	
REFERENCE	FEMALE THREAD
PH9.04RF38	BSP 3/8
PH9.04RF12	BSP 1/2
PH9.04RFN38	NPT 3/8
PH9.04RFN12	NPT 1/2

TYPE MH9 — MOULD EQUIPMENTS WITH COUPLINGS

MOULD PLATE 3/3 CIRCUITS

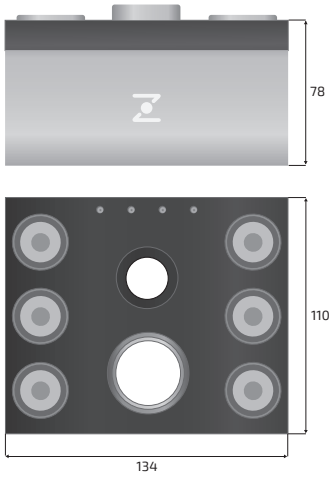

PLATE WITH 6 COUPLINGS	
REFERENCE	FEMALE THREAD
MH906RF38	BSP 3/8
MH9.06RF12	BSP 1/2
MH9.06RFN38	NPT 3/8
MH9.06RFN12	NPT 1/2

TYPE PH9 — PRESS EQUIPMENT WITH COUPLINGS

MOBILE PLATE 3/3 CIRCUITS

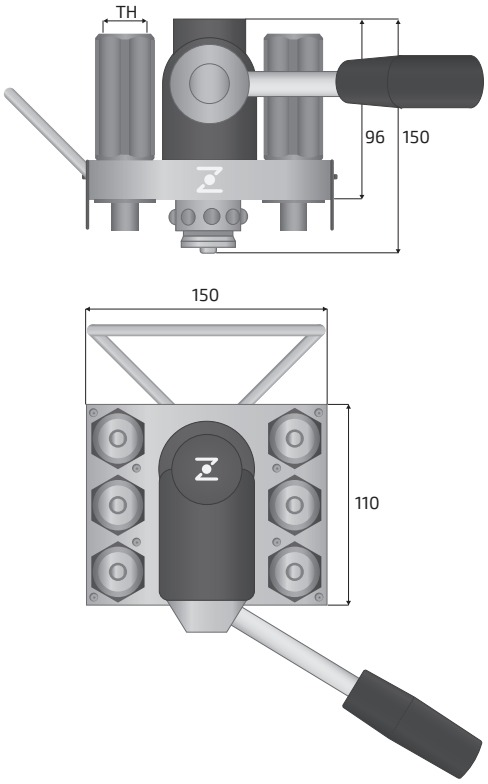

PLATE WITH 6 COUPLINGS	
REFERENCE	FEMALE THREAD
PH9.06RF38	BSP 3/8
PH9.06RF12	BSP 1/2
PH9.06RFN38	NPT 3/8
PH9.06RFN12	NPT 1/2

TYPE MHR9 — MOULD EQUIPMENTS WITH COUPLINGS

MOULD PLATE 1/1 CIRCUITS

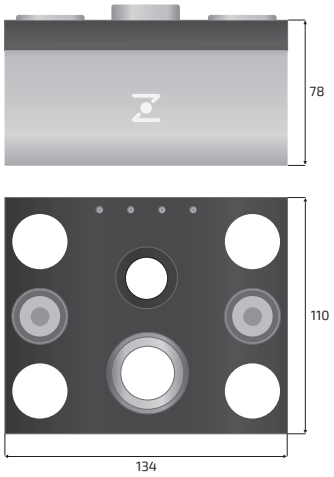

PLATE WITH 2 COUPLINGS	
REFERENCE	FEMALE THREAD
MHR9.02RF38	BSP 3/8
MHR9.02RF12	BSP 1/2
MHR9.02RFN38	NPT 3/8
MHR9.02RFN12	NPT 1/2

TYPE PHR9 — PRESS EQUIPMENT WITH COUPLINGS

MOBILE PLATE 1/1 CIRCUITS

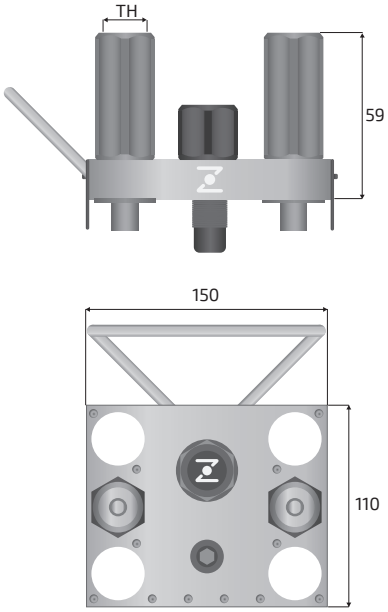

PLATE WITH 2 COUPLINGS	
REFERENCE	FEMALE THREAD
PHR9.02RF38	BSP 3/8
PHR9.02RF12	BSP 1/2
PHR9.02RFN38	NPT 3/8
PHR9.02RFN12	NPT 1/2

TYPE MHR9 — MOULD EQUIPMENTS WITH COUPLINGS

MOULD PLATE 2/2 CIRCUITS

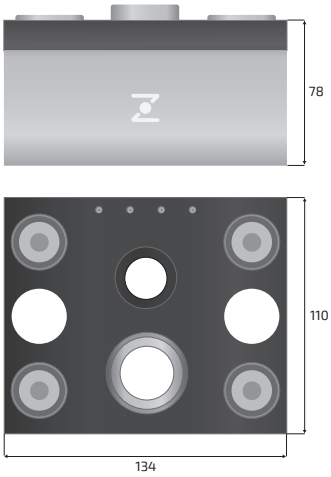

PLATE WITH 4 COUPLINGS	
REFERENCE	FEMALE THREAD
MHR9.04RF38	BSP 3/8
MHR9.04RF12	BSP 1/2
MHR9.04RFN38	NPT 3/8
MHR9.04RFN12	NPT 1/2

TYPE PHR9 — PRESS EQUIPMENT WITH COUPLINGS

MOBILE PLATE 2/2 CIRCUITS

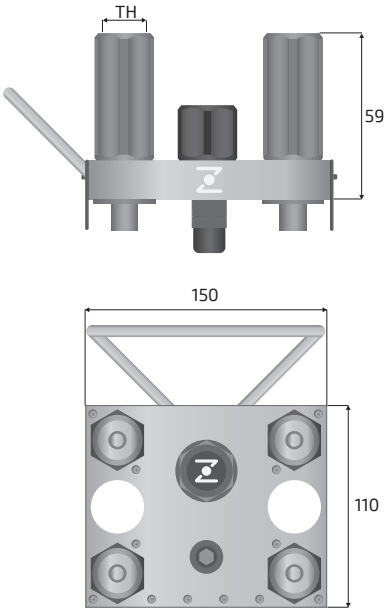

PLATE WITH 4 COUPLINGS	
REFERENCE	FEMALE THREAD
PHR904RF38	BSP 3/8
PHR9.04RF12	BSP 1/2
PHR9.04RFN38	NPT 3/8
PHR9.04RFN12	NPT 1/2

TYPE MHR9 — MOULD EQUIPMENTS WITH COUPLINGS

MOULD PLATE 3/3 CIRCUITS

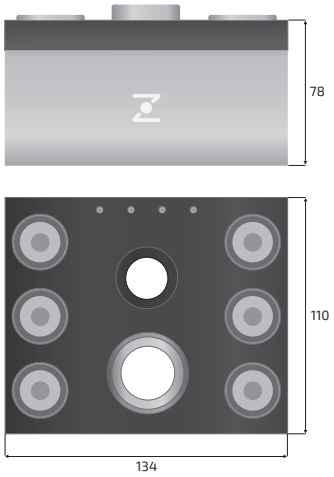

PLATE WITH 6 COUPLINGS	
REFERENCE	FEMALE THREAD
MHR9.06RF38	BSP 3/8
MHR9.06RF12	BSP 1/2
MHR9.06RFN38	NPT 3/8
MHR9.06RFN12	NPT 1/2

TYPE PHR9 — PRESS EQUIPMENT WITH COUPLINGS

MOBILE PLATE 3/3 CIRCUITS

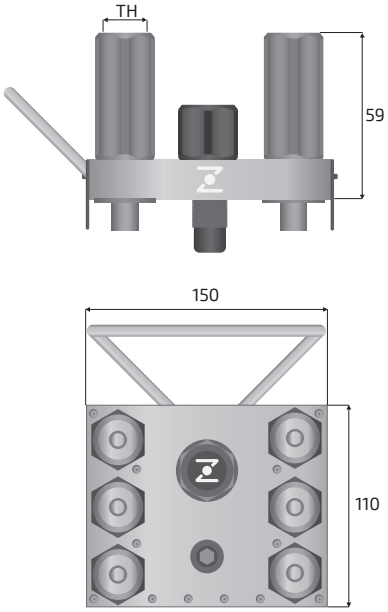

PLATE WITH 6 COUPLINGS	
REFERENCE	FEMALE THREAD
PHR9.06RF38	BSP 3/8
PHR9.06RF12	BSP 1/2
PHR9.06RFN38	NPT 3/8
PHR9.06RFN12	NPT 1/2

ZONACENTRO

MOULD COOLING PRODUCTS

The temperature control of molds in injection presses is a crucial point when you manufacture plastics and especially new high-tech plastics.
Therefore, it is very important to equip the hot and cold water circuits with suitable water connections.
ZonaCentro has a varied line of mold couplings at your disposal.

TYPE MLH — PUSH-LOCK HOSES

PUSH-LOCK HOSES

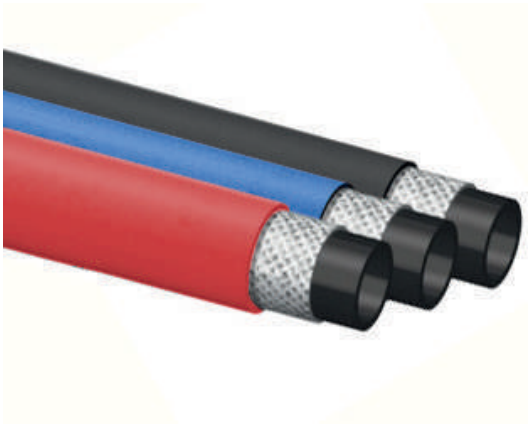

DESCRIPTION

- Easy Assembly
- No Clamp Needed
- Used in cooling circuits
- Available in 3 colors

WORKING TEMPERATURE RANGES		
WATER	- 20° C	+ 90° C
AIR	- 20° C	+ 90° C

REFERENCES			∅ INSIDE	∅ OUTSIDE	MAX. WORKING PRESSURE		BURSTING PRESSURE	
RED	BLUE	BLACK			BAR	PSI	BAR	PSI
ML10R	ML10B	ML10BK	10	16	20	300	82	1200
ML13R	ML13B	ML13BK	12	19	20	300	82	1200
ML16R	ML16B	ML16BK	16	23	20	300	82	1200

TYPE HC — HOSE CLAMPS

HOSE CLAMP

REFERENCE	HOSE SIZE
AO1417	14 - 17
AO1821	18 - 21
AO2023	20 - 23
AO2327	23 - 27
AO2528	25 - 28

REFERENCE	HOSE SIZE
ASF816	8 -16
ASF1222	12 - 22
ASF1627	16 - 27
ASF2032	20 - 32
ASF2540	25 - 40

TYPE DM — MANIFOLD DISTRIBUITOR

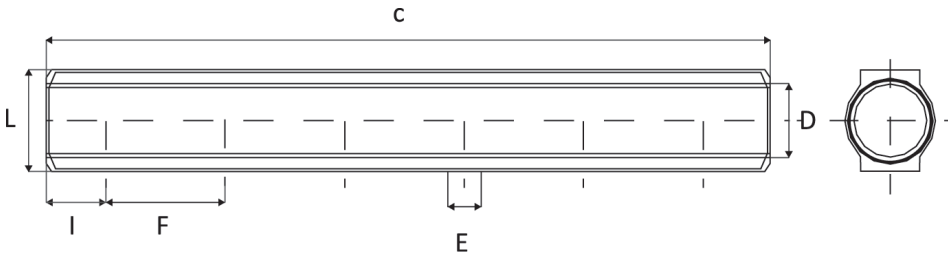

REFERENCE	C	D x E	F	I	L
DM1x38E2	80	1 x 3/8	35	23	41
DM1x38E3	115	1 x 3/8	35	23	41
DM1x38E4	150	1 x 3/8	35	23	41
DM1x38E5	185	1 x 3/8	35	23	41
DM1x38E6	220	1 x 3/8	35	23	41
DM1x38E7	225	1 x 3/8	35	23	41
DM1x38E8	290	1 x 3/8	35	23	41
DM1x38E9	325	1 x 3/8	35	23	41
DM1x38E10	360	1 x 3/8	35	23	41
DM1x38E11	395	1 x 3/8	35	23	41
DM1x38E12	430	1 x 3/8	35	23	41

REFERENCE	C	D x E	F	I	L
DM1x12E2	99	1 x 1/2	50	25	42
DM1x12E3	149	1 x 1/2	50	25	42
DM1x12E4	199	1 x 1/2	50	25	42
DM1x12E5	249	1 x 1/2	50	25	42
DM1x12E6	299	1 x 1/2	50	25	42
DM1x12E7	349	1 x 1/2	50	25	42
DM1x12E8	399	1 x 1/2	50	25	42
DM1x12E9	449	1 x 1/2	50	25	42
DM1x12E10	499	1 x 1/2	50	25	42
DM1x12E11	549	1 x 1/2	50	25	42
DM1x12E12	599	1 x 1/2	50	25	42

REFERENCE	C	D x E	F	I	L
DM114x12E2	99	114 x 1/2	50	25	51
DM114x12E3	149	114 x 1/2	50	25	51
DM114x12E4	199	114 x 1/2	50	25	51
DM114x12E5	249	114 x 1/2	50	25	51
DM114x12E6	299	114 x 1/2	50	25	51
DM114x12E7	349	114 x 1/2	50	25	51
DM114x12E8	399	114 x 1/2	50	25	51
DM114x12E9	449	114 x 1/2	50	25	51
DM114x12E10	499	114 x 1/2	50	25	51
DM114x12E11	549	114 x 1/2	50	25	51
DM114x12E12	599	114 x 1/2	50	25	51

TYPE BDM — MANIFOLD DISTRIBUITOR

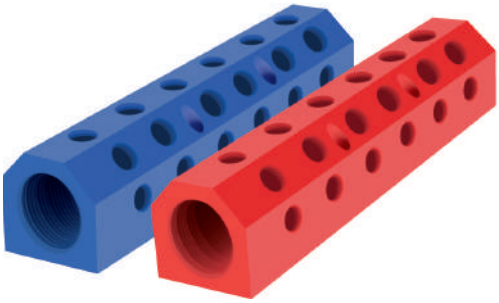

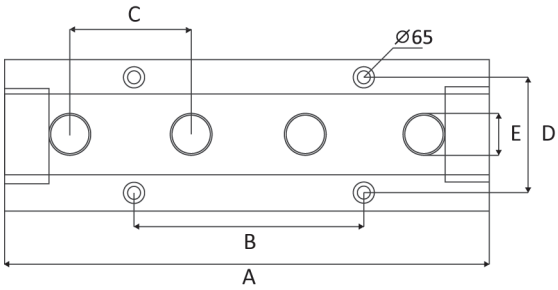

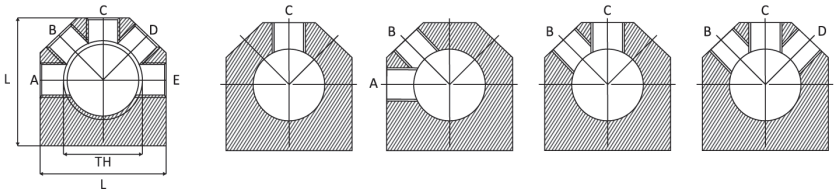

TH	A	B	C	D	E		L
1" BSP	103	0	40	38	BSP 1/4	BSP 3/8	60
	183	80	40	38	BSP 1/4	BSP 3/8	60
	263	160	40	38	BSP 1/4	BSP 3/8	60
	343	240	40	38	BSP 1/4	BSP 3/8	60

EXAMPLE CODE BDM 1 E38 ACE 4 B

- Type BDM
- INTEL (1"BSP)
- Outlet Thread Size (1/4 / 14 or 3/8 / 38)
- Position of holes in the manifold
- Number of holes in the surface
- Color (R / Red or B / Blue)

TYPE TD — PRESSURE PLUG

REFERENCE	TH
TDM1	BSP 1
TDM114	BSP 1 1/4

TYPE MF — FLEXIBLE HOSE ADAPTER MALE

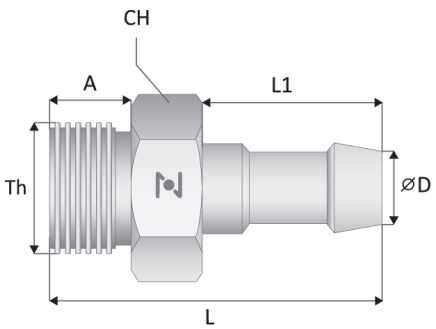

REFERENCE	Ø D		TH	A	CH	L	L1
M10N18	10	3/8	BSP 1/8	8	14	43	28
M10N14	10	3/8	BSP 1/4	10	16	42	22
M13N14	13	1/2	BSP 1/4	11	17	46	37
M10N38	10	3/8	BSP 3/8	12	19	47	28
M13N38	13	1/2	BSP 3/8	12	19	52	32
M16N38	16	5/8	BSP 3/8	12	19	52	33
M13N12	13	1/2	BSP 1/2	14	22	54	33
M16N12	16	5/8	BSP 1/2	14	22	54	33
M16N34	16	5/8	BSP 3/4	16	30	58	33

NEED CLAMP

TYPE ML — PUSH-LOCK HOSE ADAPTER MALE

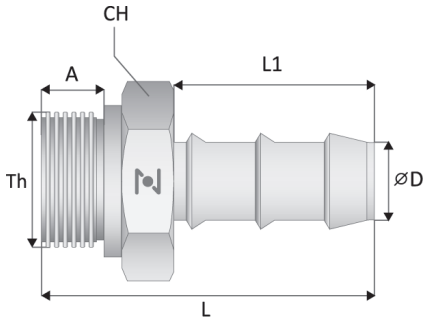

REFERENCE	Ø D		TH	A	CH	L	L1
ML10N18	10	3/8	BSP 1/8	9	19	41	25
ML13N14	13	1/2	BSP 1/4	9	19	49	29
ML10N38	10	3/8	BSP 3/8	9	22	42	25
ML13N38	13	1/2	BSP 3/8	10	22	49	29
ML16N38	16	5/8	BSP 3/8	10	22	57	37
ML13N12	13	1/2	BSP 1/2	11	27	50	29
ML16N12	16	5/8	BSP 1/2	11	27	57	37

NO CLAMP NEEDED WITH O'RINGS

TYPE SO — FULL FLOW — PUSH-LOCK HOSE MALE THREAD PLUG

PLUG

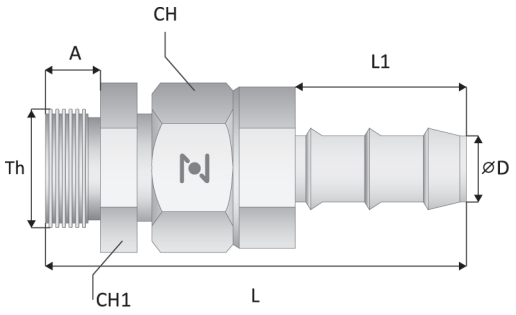

NO CLAMP NEEDED

REFERENCE	TH	ØD	A	L	L1	CH	CH1
OA10R14	BSP 1/4	10	9	63	25	22	22
OA10R38	BSP 3/8	10	9	63	25	22	22
OA10R12	BSP 1/2	10	9	63	25	22	22
OA10R34	BSP 3/4	10	9	63	25	22	27
OA13R14	BSP 1/4	13	9	63	25	22	22
OA13R38	BSP 3/8	13	9	66	29	22	22
OA13R12	BSP 1/2	13	9	66	29	22	22
OA13R34	BSP 3/4	13	9	66	29	22	27
OA16R14	BSP 1/4	16	9	63	36	22	22
OA16R38	BSP 3/8	16	9	75	36	22	22
OA16R12	BSP 1/2	16	9	75	36	22	22
OA16R34	BSP 3/4	16	9	75	36	22	27

TYPE SO — FULL FLOW — PUSH-LOCK HOSE MALE THREAD PLUG 45º

PLUG 45º

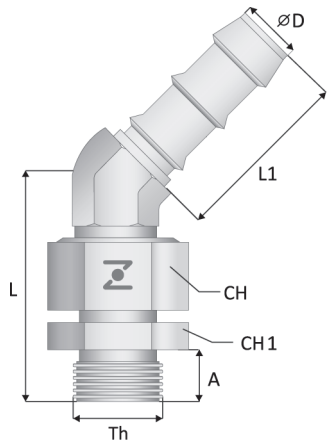

NO CLAMP NEEDED

REFERENCE	TH	ØD	A	L	L1	CH	CH1
OAB10R14	BSP 1/4	10	9	47	25	22	22
OAB10R38	BSP 3/8	10	9	47	25	22	22
OAB10R12	BSP 1/2	10	9	47	25	22	22
OAB10R34	BSP 3/4	10	9	47	25	22	27
OAB13R14	BSP 1/4	13	9	47	25	22	22
OAB13R38	BSP 3/8	13	9	47	29	22	22
OAB13R12	BSP 1/2	13	9	47	29	22	22
OAB13R34	BSP 3/4	13	9	47	29	22	27
OAB16R14	BSP 1/4	16	9	47	36	22	22
OAB16R38	BSP 3/8	16	9	47	36	22	22
OAB16R12	BSP 1/2	16	9	47	36	22	22
OAB16R34	BSP 3/4	16	9	47	36	22	27

TYPE SO — FULL FLOW — PUSH-LOCK HOSE MALE THREAD PLUG 90º

PLUG 90º

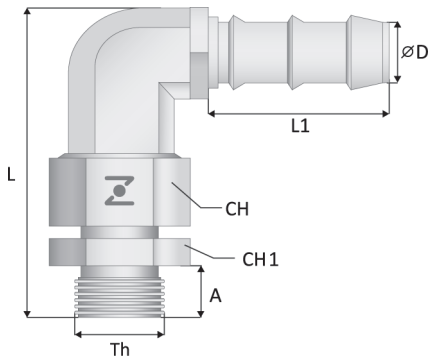

NO CLAMP NEEDED

REFERENCE	TH	ØD	A	L	L1	CH	CH1
OAC10R14	BSP 1/4	10	9	54	25	22	22
OAC10R38	BSP 3/8	10	9	54	25	22	22
OAC10R12	BSP 1/2	10	9	54	25	22	22
OAC10R34	BSP 3/4	10	9	54	25	22	27
OAC13R14	BSP 1/4	13	9	54	25	22	22
OAC13R38	BSP 3/8	13	9	54	29	22	22
OAC13R12	BSP 1/2	13	9	54	29	22	22
OAC13R34	BSP 3/4	13	9	54	29	22	27
OAC16R14	BSP 1/4	16	9	54	36	22	22
OAC16R38	BSP 3/8	16	9	54	36	22	22
OAC16R12	BSP 1/2	16	9	54	36	22	22
OAC16R34	BSP 3/4	16	9	54	36	22	27

TYPE SO — FULL FLOW — PUSH-LOCK HOSE FEMALE THREAD PLUG

PLUG

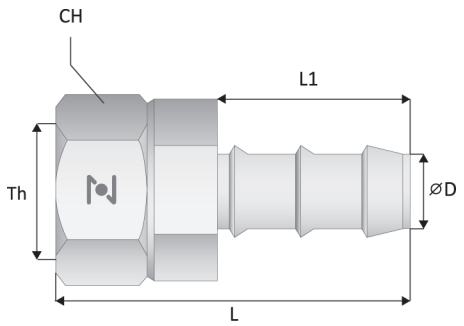

REFERENCE	TH	ØD	L	L1	CH
OA10F38	BSP 3/8	10	46,5	25	22
OA10F34	BSP 3/4	10	50	25	27
OA13F38	BSP 3/8	13	49,5	29	22
OA13F34	BSP 3/4	13	53	29	27
OA16F38	BSP 3/8	16	58,5	36	22
OA16F34	BSP 3/4	16	62	36	27

NO CLAMP NEEDED

TYPE SO — FULL FLOW — PUSH-LOCK HOSE FEMALE THREAD PLUG 45º

PLUG 45º

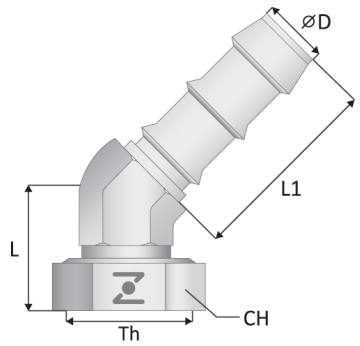

REFERENCE	TH	ØD	L	L1	CH
OAB10F38	BSP 3/8	10	28	25	22
OAB10F34	BSP 3/4	10	32	25	30
OAB13F38	BSP 3/8	13	28	29	22
OAB13F34	BSP 3/4	13	32	29	30
OAB16F38	BSP 3/8	16	28	36	22
OAB16F34	BSP 3/4	16	32	36	30

NO CLAMP NEEDED

TYPE SO — FULL FLOW — PUSH-LOCK HOSE FEMALE THREAD PLUG 90º

PLUG 90º

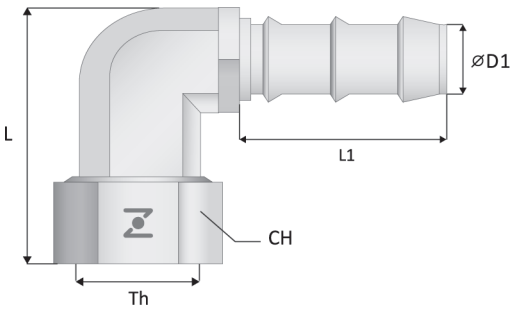

REFERENCE	TH	ØD	L	L1	CH
OAC10F38	BSP 3/8	10	37	25	22
OAC10F34	BSP 3/4	10	41	25	27
OAC13F38	BSP 3/8	13	37	29	22
OAC13F34	BSP 3/4	13	41	29	27
OAC16F38	BSP 3/8	16	37	36	22
OAC16F34	BSP 3/4	16	41	36	27

NO CLAMP NEEDED

TYPE SO — FULL FLOW — FEMALE THREAD PLUG 45º

PLUG 45º

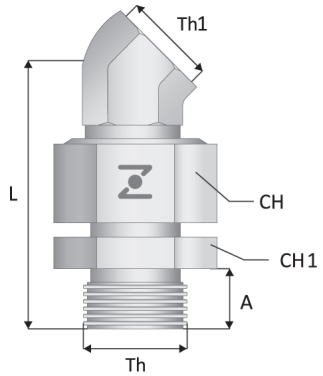

REFERENCE	TH	TH1	A	L	CH	CH1
OABF14R14	BSP 1/4	BSP 1/4	9	47	22	22
OABF14R38	BSP 1/4	BSP 3/8	9	47	22	22
OABF38R14	BSP 3/8	BSP 1/4	9	47	22	22
OABF38R38	BSP 3/8	BSP 3/8	9	47	22	22
OABF12R14	BSP 1/2	BSP 1/4	9	47	22	22
OABF12R38	BSP 1/2	BSP 3/8	9	47	22	22
OABF34R14	BSP 3/4	BSP 1/4	9	47	22	27
OABF34R38	BSP 3/4	BSP 3/8	9	47	22	27

TYPE SO — FULL FLOW — FEMALE THREAD PLUG 90º

PLUG 90º

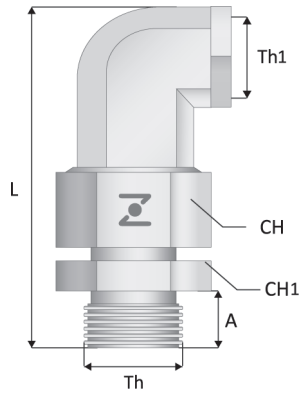

REFERENCE	TH	TH1	A	L	L1	CH	CH1
OACF14R14	BSP 1/4	BSP 1/4	9	54	25	22	22
OACF14R38	BSP 1/4	BSP 3/8	9	54	25	22	22
OACF38R14	BSP 3/8	BSP 1/4	9	54	25	22	22
OACF38R38	BSP 3/8	BSP 3/8	9	54	25	22	22
OACF12R14	BSP 1/2	BSP 1/4	9	54	25	22	22
OACF12R38	BSP 1/2	BSP 3/8	9	54	25	22	22
OACF34R14	BSP 3/4	BSP 1/4	9	54	25	22	27
OACF34R38	BSP 3/4	BSP 3/8	9	54	25	22	27

TYPE JMF — ELBOW MALE/FEMALE

ELBOW

REFERENCE	THREAD
JMF1890	BSP 1/8
JMF1490	BSP 1/4
JMF3890	BSP 3/8
JMF1290	BSP 1/2
JMF3490	BSP 3/4
JMF190	BSP 1
JMF11490	BSP 1 1/4
JMF11290	BSP 1 1/2

TYPE JF — ELBOW FEMALE

ELBOW

REFERENCE	THREAD
JFF1890	BSP 1/8
JFF1490	BSP 1/4
JFF3890	BSP 3/8
JFF1290	BSP 1/2
JFF3490	BSP 3/4
JFF190	BSP 1
JFF11490	BSP 1 1/4
JFF11290	BSP 1 1/2

TYPE CS — COLLECTOR SUPPORT

REFERENCE
CSDM

TYPE MNB — NIPPLE MALE

BRASS	STEEL	THREAD
MNB18	MNS18	BSP 1/8
MNB14	MNS14	BSP 1/4
MNB38	MNS38	BSP 3/8
MNB12	MNS12	BSP 1/2
MNB34	MNS34	BSP 3/4
MNB100	MNS100	BSP 1
MNB114	MNS114	BSP 1 1/4
MNB112	MNS112	BSP 1 1/2
MNB200	MNS200	BSP 2

TYPE MR — REDUCER MALE

BRASS	STEEL	THREAD
MRB1814	MRS1814	BSP 1/8 x 1/4
MRB1838	MRS1838	BSP 1/8 x 3/8
MRB1438	MRS1438	BSP 1/4 x 3/8
MRB1412	MRS1412	BSP 1/4 x 1/2
MRB3812	MRS3812	BSP 3/8 x 1/2
MRB3834	MRS3834	BSP 3/8 x 3/4
MRB1234	MRS1234	BSP 1/2 x 3/4
MRB341	MRS341	BSP 3/4 x 1
MRB1114	MRS1114	BSP 1 x 1 1 /4
MRB114200	MRS114200	BSP 1 1/4 x 2

TYPE RMF — REDUCER MALE / FEMALE

BRASS M/M	BRASS NIQUEL	THREAD	
		MALE	FEMALE
RM14F18	RM14F18N	BSP 1/4	BSP 1/8
RM38F18	RM38F18N	BSP 3/8	BSP 1/8
RM38F14	RM38F14N	BSP 3/8	BSP 1/4
RM12F18	RM12F18N	BSP 1/2	BSP 1/8
RM12F14	RM12F14N	BSP 1/2	BSP 1/4
RM12F38	RM12F38N	BSP 1/2	BSP 3/8
RM34F38	RM34F38N	BSP 3/4	BSP 3/8
RM34F12	RM34F12N	BSP 3/4	BSP 1/2
RM1F38	RM1F38N	BSP 1	BSP 3/8
RM1F12	RM1F12N	BSP 1	BSP 1/2
RM1F34	RM1F34N	BSP 1	BSP 3/4

TYPE UMF — UNION MALE / FEMALE

BRASS	THREAD
UMF1818	BSP 1/8 x 1/8
UMF1814	BSP 1/8 x 1/4
UMF1838	BSP 1/8 x 3/8
UMF1414	BSP 1/4 x 1/4
UMF1438	BSP 1/4 x 3/8
UMF1412	BSP 1/4 x 1/2
UMF3838	BSP 3/8 x 3/8
UMF3812	BSP 3/8 x 1/2
UMF1212	BSP 1/2 x 1/2
UMF1234	BSP 1/2 x 3/4

TYPE SG — FULL FLOW — QUICK COUPLINGS

SOCKET

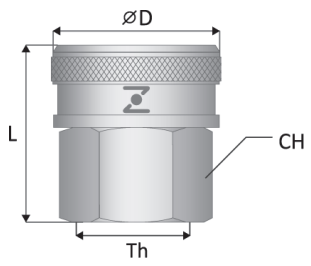

REFERENCE	TH (G)	Ø D	CH	L
SG25FF1	BSP 1	57	46	57
SG33FF114	BSP 1 1/4	65	54	62

TYPE PG — FULL FLOW — QUICK COUPLINGS

PLUG

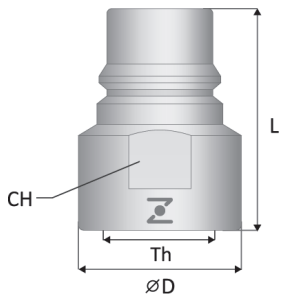

REFERENCE	TH (G)	Ø D	CH	L
PG25FM1	BSP 1	45	41	61
PG33FM114	BSP 1 1/4	55	50	66

TYPE SM — FULL FLOW — SNAPLOCK COUPLINGS

MALE TYPE A PLUG

REFERENCE			TH(G)
ALUMINIUM	STAINLESS STEEL	BRONZE	
SAM1	SIM1	SBM1	BSP 1
SAM114	SIM114	SBM114	BSP 1 1/4

TYPE SF — FULL FLOW — SNAPLOCK COUPLINGS

FEMALE TYPE B SOCKET

REFERENCE			TH(G)
ALUMINIUM	STAINLESS STEEL	BRONZE	
SAF1	SIF1	SBF1	BSP 1
SAF114	SIF114	SBF114	BSP 1 1/4

TYPE WT — MINI BALL VALVE MALE / FEMALE

BALL VALVE

REFERENCE		TH (MALE/FEMALE)
RED	BLUE	
WT18MFR	WT18MFB	BSP 1/8
WT14MFR	WT14MFB	BSP 1/4
WT38MFR	WT38MFB	BSP 3/8
WT12MFR	WT12MFB	BSP 1/2
WT34MFR	WT34MFB	BSP 3/4

TYPE WT — MINI BALL VALVE FEMALE

BALL VALVE

REFERENCE		TH (MALE/FEMALE)
RED	BLUE	
WT18FFR	WT18FFB	BSP 1/8
WT14FFR	WT14FFB	BSP 1/4
WT38FFR	WT38FFB	BSP 3/8
WT12FFR	WT12FFB	BSP 1/2
WT34FFR	WT34FFB	BSP 3/4

TYPE VBH — SHORT HANDLE BALL VALVE FEMALE

BALL VALVE

REFERENCE	TH (MALE/FEMALE)
VBH14F	BSP 1/4
VBH38F	BSP 3/8
VBH12F	BSP 1/2
VBH34F	BSP 3/4
VBH1F	BSP 1

TYPE VBH — SHORT HANDLE BALL VALVE MALE/FEMALE

BALL VALVE

REFERENCE	TH (MALE/FEMALE)
VBH14MF	BSP 1/4
VBH38MF	BSP 3/8
VBH12MF	BSP 1/2
VBH34MF	BSP 3/4
VBH1MF	BSP 1

TYPE VLH — LARGE HANDLE BALL VALVE FEMALE

BALL VALVE

REFERENCE	TH (MALE/FEMALE)
VLH14F	BSP 1/4
VLH38F	BSP 3/8
VLH12F	BSP 1/2
VLH34F	BSP 3/4
VLH1F	BSP 1
VLH114F	BSP 1 1/4
VLH112F	BSP 1 1/2
VLH2F	BSP 2

TYPE VLH — SHORT HANDLE BALL VALVE MALE/FEMALE

BALL VALVE

REFERENCE	TH (MALE/FEMALE)
VLH14MF	BSP 1/4
VLH38MF	BSP 3/8
VLH12MF	BSP 1/2
VLH34MF	BSP 3/4
VLH1MF	BSP 1
VLH114MF	BSP 1 1/4
VLH112MF	BSP 1 1/2
VLH2MF	BSP 2

TYPE BV — BALL VALVE WITH 2 PIECES CONNECTOR

BALL VALVE

REFERENCE	TH (MALE/FEMALE)
BV2PS12MF	BSP 1/2
BV2PS34MF	BSP 3/4
BV2PS1MF	BSP 1
BV2PS114MF	BSP 1 1/4

TYPE BV — BALL VALVE WITH THERMOMETER

BALL VALVE

REFERENCE	TH (MALE/FEMALE)
BVTH1MF	BSP 1

TYPE FR — FLOW METER

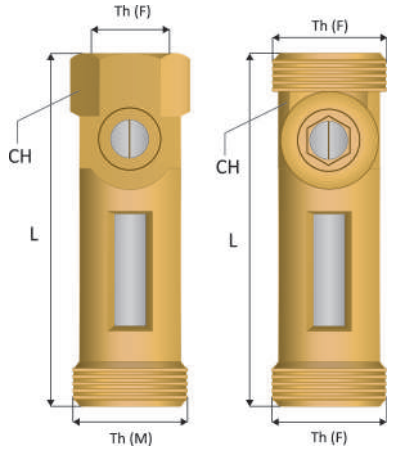

- Operating temperature: 100º C Max.
- Operating pressure: 10 Bar

REFERENCE	TH	CH	L	FLOW	Kvs (m³/h)
FR12F34M	1/2 BSP (F) - 3/4 BSP (M)	24	81	2,0 - 8,0 (l/min)	1,8
FR1M1M	1 BSP (M/M)	30	104	4,0 - 15 (l/min)	5,0

TYPE OFR — ORIENTED FLOW METER MALE/FEMALE

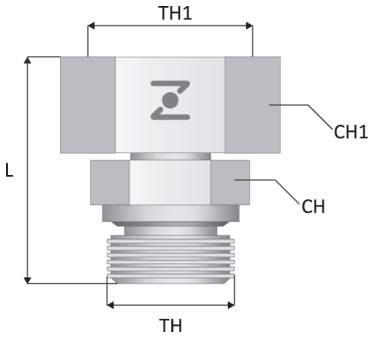

REFERENCE	TH	TH1	CH	CH1	L
OFR38M34F	BSP 3/8	BSP 3/4	22	30	38
OFR12M34F	BSP 1/2	BSP 3/4	22	30	38

TYPE OFR — ORIENTED FLOW METER MALE

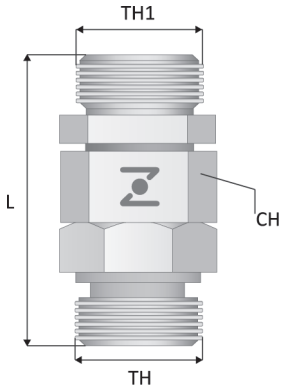

REFERENCE	TH	TH1	CH	L
OFR38M	BSP 3/8	BSP 3/8	22	52
OFR3812M	BSP 3/8	BSP 1/2	22	52
OFR12M	BSP 1/2	BSP 1/2	22	52

TYPE VD — SEALING O-RING

EXAMPLE CODE VD 10,00 x 2,50 NBR

- Type VD
- ∅ Inside
- ∅ Thickness
- Material

TEMPERATURE RANGE		
MATERIAL	NBR	-25ºC AND 100ºC
	FPM (VITON)	-20ºC AND 220ºC
	EPDM	-45ºC AND 130ºC

TYPE SC — STEEL JOINT WITH NITRILE RING

REFERENCE	THREAD
SC18	BSP 1/8
SC14	BSP 1/4
SC38	BSP 3/8
SC12	BSP 1/2
SC34	BSP 3/4
SC1	BSP 1

TYPE ZC — CYCLE COUNTER

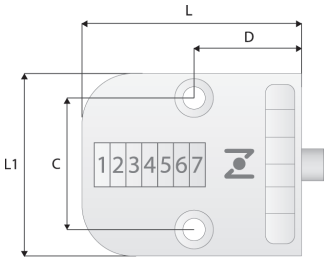

REFERENCE	L	L1	C	D
ZCC	47,5	38	28	24

TYPE MS — MALE THREAD FITTING WITH PUSH IN

STRAIGHT

REFERENCE	HOSE	TH (MALE)
TP8R18	8	BSP 1/8
TP8R14	8	BSP 1/4
TP8R38	8	BSP 3/8
TP8R12	8	BSP 1/2
TP10R18	10	BSP 1/8
TP10R14	10	BSP 1/4
TP10R38	10	BSP 3/8
TP10R12	10	BSP 1/2
TP12R18	12	BSP 1/8
TP12R14	12	BSP 1/4
TP12R38	12	BSP 3/8
TP12R12	12	BSP 1/2

TYPE ME — MALE ELBOW THREAD FITTING WITH PUSH IN

ELBOW

REFERENCE	HOSE	TH (MALE)
TP8R18C	8	BSP 1/8
TP8R14C	8	BSP 1/4
TP8R38C	8	BSP 3/8
TP8R12C	8	BSP 1/2
TP10R18C	10	BSP 1/8
TP10R14C	10	BSP 1/4
TP10R38C	10	BSP 3/8
TP10R12C	10	BSP 1/2
TP12R18C	12	BSP 1/8
TP12R14C	12	BSP 1/4
TP12R38C	12	BSP 3/8
TP12R12C	12	BSP 1/2

TYPE MS — MALE STRAIGHT CONNECTOR

STRAIGHT

REFERENCE	THREAD	
MS186	BSP 1/8	6 x 4 mm
MS146	BSP 1/4	6 x 4 mm
MS386	BSP 3/8	6 x 4mm
MS126	BSP 1/2	6 x 4 mm
MS188	BSP 1/8	8 x 6 mm
MS148	BSP 1/4	8 x 6 mm
MS388	BSP 3/8	8 x 6 mm
MS128	BSP 1/2	8 x 6 mm
MS1810	BSP 1/8	10 x 8 mm
MS1410	BSP 1/4	10 x 8 mm
MS3810	BSP 3/8	10 x 8 mm
MS1210	BSP 1/2	10 x 8 mm

TYPE ME — SWIVEL MALE ELBOW

ELBOW

REFERENCE	THREAD	
ME186	BSP 1/8	6 x 4 mm
ME146	BSP 1/4	6 x 4 mm
ME188	BSP 1/8	8 x 6 mm
ME148	BSP 1/4	8 x 6 mm
ME1410	BSP 1/4	10 x 8 mm

TYPE TP — POLYETHYLENE HOSE

REFERENCES	∅ INSIDE	∅ OUTSIDE	MAX. WORKING PRESSURE		BURSTING PRESSURE	
			BAR	PSI	BAR	PSI
TP 4X6	4	6	11	159	36	522
TP 5.5X8	5.5	8	9	130	29	520
TP 7X10	7	10	9	130	28	406
TP 8X12	8	12	10	145	32	464

COLOR AVAILABLE: BLUE (B); RED (R); BLACK (BK); YELLOW (Y); GREEN (G)

EXAMPLE CODE TP 7X10B

TYPE CC — CLOSURE TAP

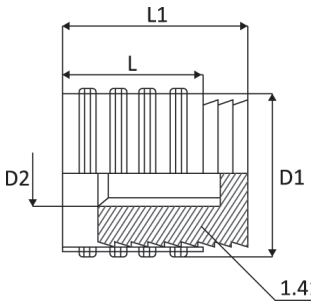

REFERENCE	D1	D2	L	L1
CC6	6	M3	11.5	8
CC7	7	M4	11.5	8
CC8	8	M4	11.5	8
CC10	10	M6	14	10
CC12	12	M6	14	10
CC14	14	M8	16	12
CC15	15	M8	16	12
CC16	16	M8	16	12

ZONA CENTRO

TYPE TP — CYLINDRICAL SOCKET SCREW PLUGS

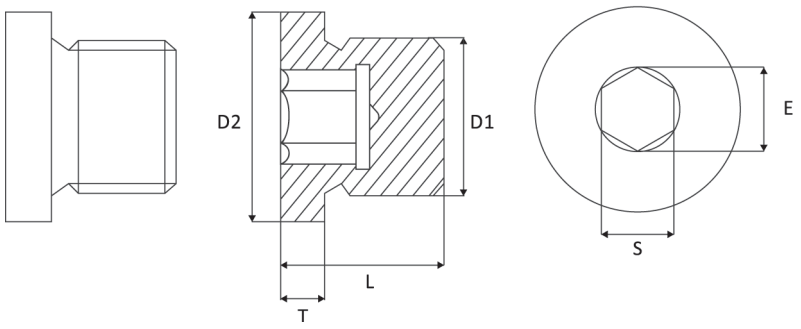

REFERENCE			DIMENSIONS					
STEEL	SSA2	BRASS	THREAD	D2	S	E	L	Tmin.
CM10S	CM10SS	CM10B	M10 x 1	14	5	5,7	11	5
CM12S	CM12SS	CM12B	M12 x 1,5	17	6	6,9	15	7
CM14S	CM14SS	CM14B	M14 x 1,5	19	6	6,9	15	7
CM16S	CM16SS	CM16B	M16 x 1,5	21	8	9,2	15	7,5
CM18S	CM18SS	CM18B	M18 x 1,5	23	8	9,2	16	7,5
CM20S	CM20SS	CM20B	M20 x 1,5	25	10	11,4	18	7,5
CM22S	CM22SS	CM22B	M22 x 1,5	27	10	11,4	18	7,5
CM24S	CM24SS	CM24B	M24 x 1,5	29	12	13,7	18	7,5
CM26S	CM26SS	CM26B	M26 x 1,5	31	12	13,7	20	9
CM27S	CM27SS	CM27B	M27 x 2	32	12	13,7	20	9
CM30x1,5S	CM30x1,5SS	CM30x1,5B	M30 x 1,5	36	17	19,4	20	9
CM30S	CM30SS	CM30B	M30 x 2	36	17	19,4	20	9
CM36x1,5S	CM36x1,5SS	CM36x1,5B	M36 x 1,5	42	19	21,7	21	10,5
CM36S	CM36SS	CM36B	M36 x 2	42	19	21,7	21	10,5
CM38S	CM38SS	CM38B	M38 x 1,5	42	19	21,7	21	10,5
CM42S	CM42SS	CM42B	M42 x 1,5	49	22	25,2	21	10,5
CM45S	CM45SS	CM45B	M45 x 1,5	52	22	25,2	21	10,5
CM48S	CM48SS	CM48B	M48 x 1,5	55	24	27,4	21	10,5
CM52x1,5S	CM52x1,5SS	CM52x1,5B	M52 x 1,5	60	24	27,4	21	10,5
CM52S	CM52SS	CM52B	M52 x 2	60	24	27,4	21	10,5
GAS THREAD								
C18S	C18SS	C18B	G1/8	14	5	5,7	11	5
C14S	C14SS	C14B	G1/4	18	6	6,9	15	7
C38S	C38SS	C38B	G3/8	22	8	9,2	15	7,5
C12S	C12SS	C12B	G1/2	26	10	11,4	18	7,5
C34S	C34SS	C34B	G3/4	32	12	13,7	20	9
C61S	C61SS	C61B	G6 1	39	17	19,4	21	9
C114S	C114SS	C114B	G1 1/4	49	22	25,2	21	10,5
C112S	C112SS	C112B	G1 1/2	55	24	27,4	21	10,5
C134S	C134SS	C134B	G1 3/4	-	-	-	-	-
C2S	C2SS	C2B	G2	68	32	36,6	25	14

TYPE TP — CYLINDRICAL SOCKET SCREW PLUGS

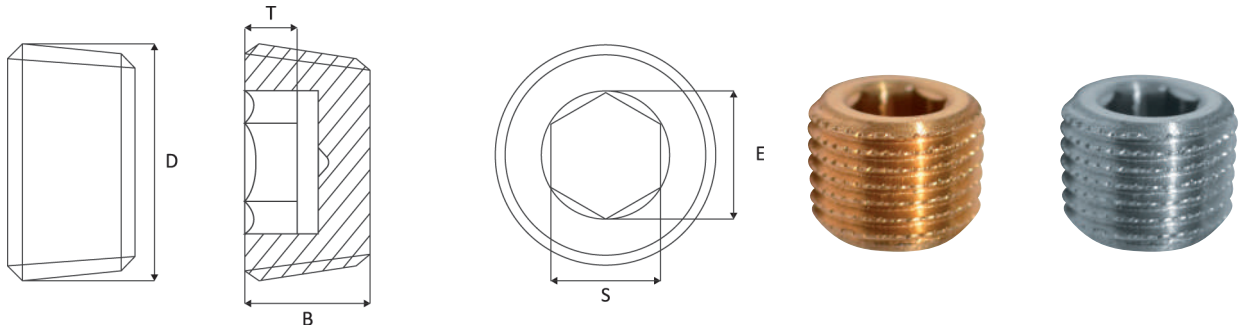

REFERENCE			DIMENSIONS				
STEEL	SSA2	BRASS	THREAD	B	S	E	Tmin.
PM8S	PM8SS	PM8B	M8 x 1	8	4	4,6	4
PM10S	PM10SS	PM10B	M10 x 1	8	5	5,7	4
PM12S	PM12SS	PM12B	M12 x 1,5	10	6	6,9	5
PM14S	PM14SS	PM14B	M14 x 1,5	10	7	8	5
PM16S	PM16SS	PM16B	M16 x 1,5	10	8	9,2	5
PM18S	PM18SS	PM18B	M18 x 1,5	10	8	9,2	5
PM20S	PM20SS	PM20B	M20 x 1,5	10	10	11,4	5
PM22S	PM22SS	PM22B	M22 x 1,5	10	10	11,4	5
PM24S	PM24SS	PM24B	M24 x 1,5	12	12	13,7	6
PM26S	PM26SS	PM26B	M26 x 1,5	12	12	13,7	6
PM27S	PM27SS	PM27B	M27 x 1,5	12	12	13,7	6
PM30x1,5S	PM30x1,5SS	PM30x1,5B	M30 x 1,5	12	17	19,4	6
PM30S	PM30SS	PM30B	M30 x 2	12	17	19,4	6
PM36x1,5S	PM36x1,5SS	PM36x1,5B	M36 x 1,5	15	19	21,7	7,5
PM36S	PM36SS	PM36B	M36 x 2	15	19	21,7	7,5
PM38S	PM38SS	PM38B	M38 x 1,5	15	19	21,7	7,5
PM42S	PM42SS	PM42B	M42 x 1,5	18	22	25,2	11,5
GAS THREAD							
P18S	P18SS	P18B	R 1/8	8	5	5,7	4
P14S	P14SS	P14B	R 1/4	10	7	8	5
P38S	P38SS	P38B	R 3/8	10	8	9,2	5
P12S	P12SS	P12B	R 1/2	10	10	11,4	5
P34S	P34SS	P34B	R 3/4	12	12	13,7	6
P1S	P1SS	P1B	R1	12	17	19,4	6
P114S	P114SS	P114B	R1 1/4	18	22	25,2	11,5
P112S	P112SS	P112B	R1 1/2	20	24	27,4	11,5
P2S	P2SS	P2B	R2	22	32	35,6	17
NPT THREAD							
P116SN	P116SSN	P116BN	1 1/6	8	4	4,6	4
P18SN	P18SSN	P18BN	1/8	8	5	5,7	4
P14SN	P14SSN	P14BN	1/4	10	7	8	5
P38SN	P38SSN	P38BN	3/8	10	8	9,2	5
P12SN	P12SSN	P12BN	1/2	10	10	11,4	5
P34SN	P34SSN	P34BN	3/4	12	12	13,7	6
P1SN	P1SSN	P1BN	1	12	17	19,4	6

ZONA CENTRO

TYPE TP — HEXAGON SOCKET SCREW PLUGS

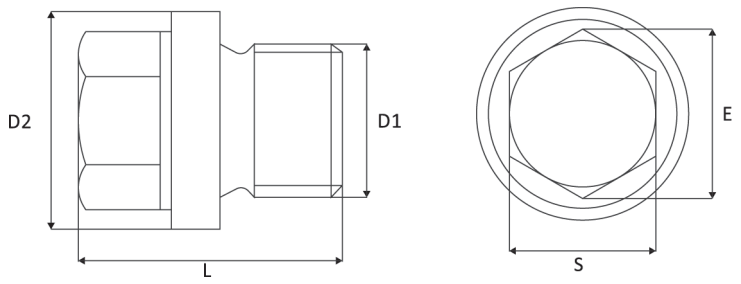

REFERENCE		DIMENSIONS				
STEEL	SSA2	THREAD	D2	S	E	L
HM10S	HM10SS	M10 x 1	14	10	10,89	17
HM12S	HM12SS	M12 x 1,5	17	13	14,2	21
HM14S	HM14SS	M14 x 1,5	19	13	14,2	21
HM16S	HM16SS	M16 x 1,5	21	17	18,72	21
HM18S	HM18SS	M18 x 1,5	23	17	18,72	24
HM20S	HM20SS	M20 x 1,5	25	19	20,88	26
HM22S	HM22SS	M22 x 1,5	27	19	20,88	26
HM24S	HM24SS	M24 x 1,5	29	22	23,91	27
HM26S	HM26SS	M26 x 1,5	31	24	26,17	30
HM27S	HM27SS	M27 x 1,5	32	24	26,17	30
HM30x1,5S	HM30x1,5SS	M30 x 1,5	36	24	26,17	30
HM30S	HM30SS	M30 x 2	36	24	26,17	30
HM36x1,5S	HM36x1,5SS	M36 x 1,5	42	27	29,56	32
HM36S	HM36SS	M36 x2	42	27	29,56	32
HM38S	HM38SS	M38 x 1,5	44	27	29,56	32
HM42S	HM42SS	M42 x 1,5	49	30	32,95	33
HM45S	HM45SS	M45 x 1,5	52	30	32,95	33
HM48S	HM48SS	M48 x 1,5	55	30	32,95	33
HM52x1,5S	HM52x1,5SS	M52 x 1,5	60	30	32,95	33
HM52S	HM52SS	M52 x 2	60	30	32,95	33
GAS THREAD						
H18S	H18SS	G1/8	14	10	10,89	17
H14S	H14SS	G1/4	18	13	14,2	21
H38S	H38SS	G3/8	22	17	18,72	21
H12S	H12SS	G1/2	26	19	20,88	26
H34S	H34SS	G3/4	32	24	26,17	30
H1S	H1SS	G1	39	27	29,56	32
H114S	H114SS	G1 1/4	49	30	32,95	33
H112S	H112SS	G1 1/2	55	30	32,95	33
H134S	H134SS	G1 3/4	62	36	39,55	40
H2S	H2SS	G2	68	36	39,55	40

TYPE PFM — PLATE FOR FIXING MICROS

REFERENCE
PFM 01

PLATE FOR FIXING MICROS

REFERENCE
PFM 02

TYPE PFM — PLATE FOR FIXING MICROS

REFERENCE
PFM 03

TYPE PFM — PLATE FOR FIXING MICROS

REFERENCE
PFM 04

ZONACENTRO

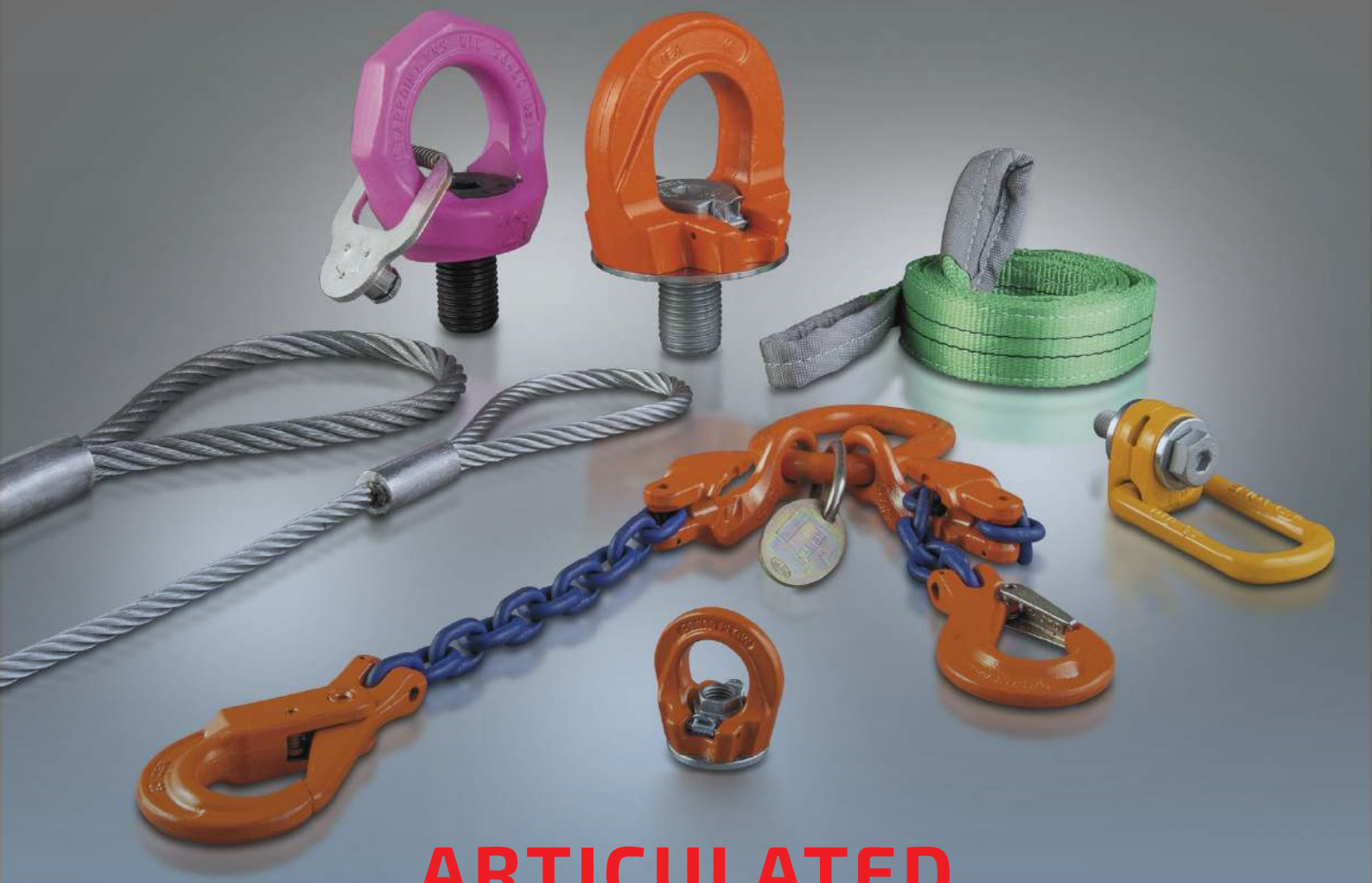

ARTICULATED LIFTING RINGS

ROTATING EYEBOLTS,LIFTING AND LASHING POINTS AND ANTIFALLING STOP DEVICE

TYPE A — HEAVY LIFT SWIVEL HOIST RING

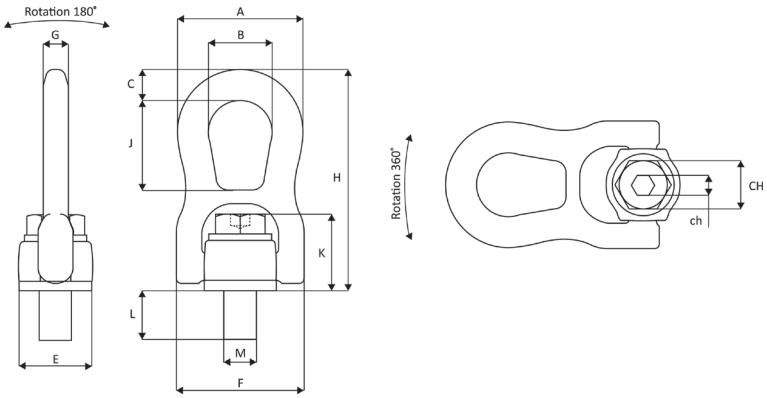

REFERENCE	SIZE	W.L.L	A	B	C	E	F	G	H	J	K	L	CH	ch
AREM8	M8	0,3	56	28	14	30	55	11	99	40	33,5	12	13	5
AREM10	M10	0,6	56	28	14	30	55	11	99	40	34,5	15	17	6
AREM12	M12	1	56	28	14	30	55	11	99	40	35,5	18	19	7
AREM14	M14	1,3	74,5	38	18	47	78	17	135,5	55	46	21	22	7
AREM16	M16	1,6	74,5	38	18	47	78	17	135,5	55	46,5	25	24	10
AREM18	M18	2	74,5	38	18	47	78	17	135,5	55	47	27	27	10
AREM20	M20	2,5	74,5	38	18	47	78	17	135,5	55	48	30	30	12
AREM22	M22	3	106	56	25	62	114,5	22	198,5	84	63,5	33	32	12
AREM24	M24	4	106	56	25	62	114,5	22	198,5	84	64,5	36	36	14
AREM27	M27	5	106	56	25	62	114,5	22	198,5	84	66,5	40	41	14
AREM30	M30	6,3	106	56	25	62	114,5	22	198,5	84	68	45	46	17

TYPE B — HEAVY LIFT SWIVEL HOIST RING

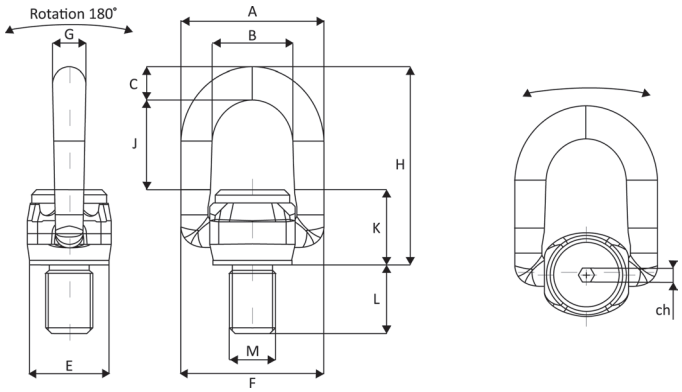

REFERENCE	SIZE	W.L.L	A	B	C	E	F	G	H	J	K	L	CH
BREM33	M33	8	150	85	32	76,5	150	32	220	108	80	50	17
BREM36	M36	10	150	85	32	76,5	150	32	220	108	80	54	17
BREM39	M39	10	150	85	32	76,5	150	32	220	108	80	58	17
BREM42	M42	12,5	150	85	32	76,5	150	32	220	108	80	63	17
BREM45	M45	15	176	100	39	95	176	39	257	128	90	63	17
BREM48	M48	17	176	100	39	95	176	39	257	128	90	68	17
BREM52	M52	20	176	100	39	95	176	39	257	128	90	68	17
BREM56	M56	25	200	113	46	110	200	46	277	126	105	78	19
BREM64	M64	35	200	113	46	110	200	46	277	126	105	90	19
BREM72	M72	25	200	113	46	110	200	46	277	126	105	90	19
BREM80	M80	35	200	113	46	110	200	46	277	126	105	90	19
BREM90	M90	35	200	113	46	110	200	46	277	126	105	90	19
BREM100	M100	35	200	113	46	110	200	46	277	126	105	90	19

TYPE C — ROTATING EYEBOLT WITH RING

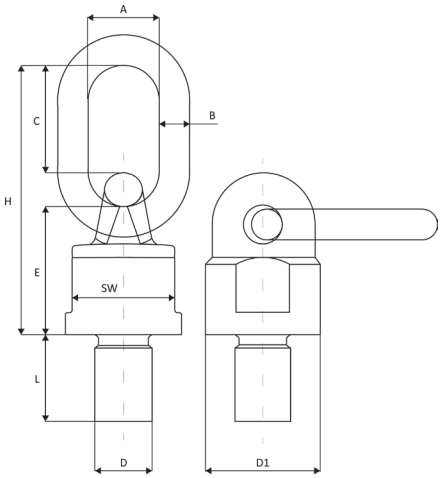

REFERENCE	SIZE	W.L.L	A	B	C	E	H	SW	D1
CREM816	M8x16	0,3	30	13	46	50	105	30	38
CREM818	M8x18	0,3	30	13	46	50	105	30	38
CREM1018	M10x18	0,3	30	13	46	50	105	30	38
CREM1218	M12x18	0,5	30	13	46	50	105	30	38
CREM1225	M12x25	0,5	30	13	46	50	105	30	38
CREM1620	M16x20	1,12	30	13	46	50	105	30	38
CREM1630	M16x30	1,12	30	13	46	50	105	30	38
CREM2030T112	M20x30	1,12	30	13	46	50	105	30	38
CREM2030	M20x30	2	34	16	57	61	131	40	50
CREM2430	M24x30	3,15	40	18	70	68	153	48	58
CREM3035T53	M30x35	5,3	45	22	65	80	165	65	75
CREM3045T53	M30x45	5,3	45	22	65	80	165	65	75
CREM3035	M30x35	8	50	23	95	95	205	75	85
CREM3045	M30x45	8	50	23	95	95	205	75	85
CREM3654	M36x54	8	50	23	95	95	205	75	85
CREM4263	M42x63	10	50	23	95	95	205	75	85
CREM4860	M48x60	15	70	32	120	130	280	95	120
CREM5678	M56x78	15	70	32	120	130	280	95	120
CREM6496	M64x96	15	70	32	120	130	280	95	120
CREM72108	M72x108	25	90	45	130	165	338	134	170
CREM80120	M80x120	30	90	45	130	165	338	134	170
CREM90135	M90x135	35	90	45	130	165	338	134	170

TYPE D — ROTATING EYEBOLT WITH RING

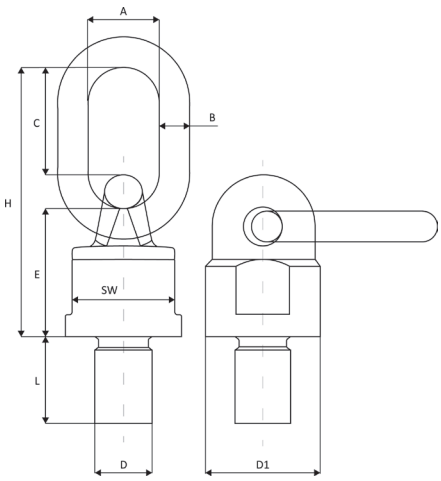

REFERENCE	SIZE	W.L.L	A	B	C	E	H	SW	D1
DREM816	M8x16	0,3	30	13	46	50	105	30	38
DREM818	M8x18	0,3	30	13	46	50	105	30	38
DREM1018	M10x18	0,5	30	13	46	50	105	30	38
DREM1218	M12x18	0,7	30	13	46	50	105	30	38
DREM1420	M14x20	1	30	13	46	50	105	30	38
DREM1620	M16x20	1,4	30	13	46	50	105	30	38
DREM2030T17	M20x30	1,7	30	13	46	50	105	30	38
DREM2430T17	M24x30	1,7	30	13	46	50	105	30	38
DREM2030	M20x30	2,5	34	16	57	61	131	40	50
DREM2430	M24x30	4	40	18	70	68	153	48	58
DREM3035T4	M30x35	4	40	18	70	68	153	48	58
DREM3035	M30x35	6,7	45	22	65	71	156	70	80
DREM3045	M30x45	8	50	23	91	86	200	80	90
DREM3654	M36x54	10	50	23	91	86	200	80	90
DREM4263	M42x63	12,5	50	23	91	86	200	80	90
DREM4560T125	M45x60	12,5	50	23	91	86	200	80	90
DREM4872	M48x72	12,5	50	23	91	86	200	80	90
DREM4560	M45x60	16	70	32	120	112	262	100	120
DREM4860	M48x60	17	70	32	120	112	262	100	120
DREM5678	M56x78	18	70	32	120	112	262	100	120
DREM6496T20	M64x96	20(25)	70	32	120	112	262	100	120
DREM6496T28	M64x96	28	90	45	124	165	333	134	170
DREM72108T315	M72x108	31,5	90	45	124	165	333	134	170
DREM6496	M64x96	35	90	45	124	165	333	134	170
DREM72108	M72x108	40	90	45	124	165	333	134	170

TYPE E — ROTATING EYEBOLT WITH CLAMP

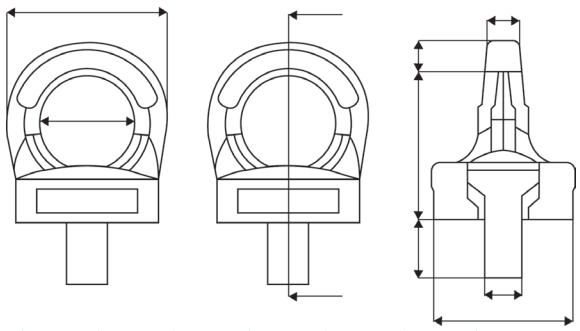

REFERENCE	SIZE	W.L.L	A	B	C	D	E	F	G	H	I	W	J	K	Ch
EREM8	M8	0,3	57	34	10	78	24	41	30	26,5	25	43	51	35	13
EREM10	M10	0,63	57	34	10	78	24	41	30	26,5	25	42	51	35	17
EREM12	M12	1	66	38	13,5	85	30	50	36	33	32	40	52	28	19
EREM16	M16	1,5	66	38	13,5	85	30	50	36	33	32	38	52	28	24
EREM20	M20	2,5	87	55	16	111	48	68	44	42,5	45	54	71	36	30
EREM24	M24	4	87	55	16	111	48	68	44	42,5	45	51	71	36	36
EREM27	M27	4	109	66	22,5	145	54	91	63	58,5	60	64	86	47	41
EREM30	M30	5	109	66	22,5	145	54	91	65	58,5	60	62	86	47	46
EREM36T7	M36	7	109	66	22,5	145	54	91	55	58,5	60	60	86	43	55
EREM36	M36	8	136	78	28	190	62	108	81	72,5	70	88	115	74	55
EREM42T10	M42	10	136	78	28	190	62	108	75	72,5	70	86	115	70	65
EREM42	M42	15	169	97	36	242	68	131	89	87,5	85	121	151	97	65
EREM48	M48	20	169	97	36	242	68	131	89	87,5	95	117	151	93	75

TYPE F — ROTATION EYEBOLT H.T

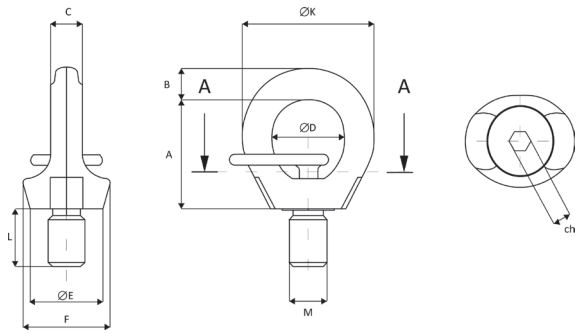

REFERENCE		SIZE	W.L.L	A	B	C	D	E	F	K	L	CH
NO KEY	WITH KEY											
FREM8	FREM8K	M8	0,3	35	11	9	25	25	30	47	12	6
FREM10	FREM10K	M10	0,4	35	11	9	25	25	30	47	15	6
FREM12	FREM12K	M12	0,75	43	12,5	11,5	30	30	36,5	55,5	18	7
FREM14	FREM14K	M14	0,75	43	12,5	11,5	30	30	36,5	55,5	18	7
FREM16	FREM16K	M16	1,5	49,5	14,5	15,7	35	35	41,8	64,5	24	8
FREM18	FREM18K	M18	1,5	49,5	14,5	15,7	35	35	41,8	64,5	24	8
FREM20	FREM20K	M20	2,3	58	16	18	40	42	51,5	74,5	30	10
FREM22	FREM22K	M22	2,3	58	16	18	40	42	51,5	74,5	30	10
FREM24	FREM24K	M24	3,2	69	20,5	22	49	50	58	90	36	12
FREM27	FREM27K	M27	3,2	69	20,5	22	49	50	58	90	36	12
FREM30	FREM30K	M30	4,5	86	25,5	28	60	66	73	111	45	17
FREM33	FREM33K	M33	4,5	86	25,5	28	60	66	73	111	45	17
FREM36	FREM36K	M36	7	107	32	32	74	75	96,5	135	54	22
FREM42	FREM42K	M42	9	120	38	40,5	82	85	110	158	63	24
FREM48	FREM48K	M48	12	139	43	44	95	100	124,5	179	72	27

TYPE G — LIFTING EYE BOLTS DIN580

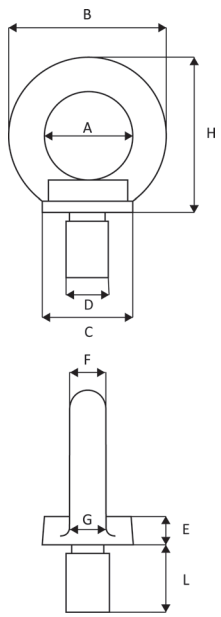

REFERENCE	SIZE	A	B	C	E	F	G	H	L	MAX. TIGHTENING COUPLE
GREM6	M6	20	36	20	6	8	10	36	13	3,5
GREM8	M8	20	36	20	6	8	10	36	13	8
GREM10	M10	25	45	25	8	10	12	45	17	16
GREM12	M12	30	54	30	10	12	14	53	20,5	28
GREM14	M14	30	54	30	10	12	14	53	20,5	45
GREM16	M16	35	63	35	12	14	16	62	27	70
GREM18	M18	35	63	35	12	14	16	62	27	95
GREM20	M20	40	72	40	14	16	19	71	30	135
GREM22	M22	40	72	40	14	16	19	71	30	182
GREM24	M24	50	90	50	18	20	24	90	36	230
GREM27	M27	54	98	62	20	22	26	99	40	343
GREM30	M30	60	108	65	22	24	28	109	45	465
GREM33	M33	60	108	65	22	24	28	109	45	632
GREM36	M36	70	126	75	26	28	32	128	54	814
GREM39	M39	80	144	85	30	32	38	147	63	1059
GREM42	M42	80	144	85	30	32	38	147	63	1304
GREM45	M45	90	166	100	35	38	46	168	68	1638
GREM48	M48	90	166	100	35	38	46	168	68	1981
GREM52	M52	100	184	110	38	42	50	187	78	2540
GREM56	M56	100	184	110	38	42	50	187	78	3000
GREM64	M64	110	206	120	42	48	58	208	90	4736
GREM72	M72	140	260	150	50	60	72	260	100	6913
GREM80	M80	160	296	170	55	68	80	298	112	9625
GREM100	M100	180	330	190	60	75	88	330	130	19613

ZONACENTRO

HYDRAULIC CYLINDERS

TIE-RODS ISO 6020/2 HYDRAULIC CYLINDERS
COUNTER FLANGES ISO 6020/2 HYDRAULIC CYLINDERS
ISO 6020/2 SERVOCYLINDERS
ISO 6022 HYDRAULIC CYLINDERS
HEAVY DUTY COMPACT HYDRAULIC CYLINDERS
LIGTH COMPACT HYDRAULIC CYLINDERS
ROTARY ACTUATORS
ACESSORIES FOR ISO HYDRAULIC CYLINDERS
TECHNICAL TABLES

ON REQUEST